NitriTox®

Online Nitrificants Toximeter

Operation Manual

Document NitriTox®-04E5114
12/14
Software - Version: 4.4.

Certificate

Standard **ISO 9001:2008**

Certificate Registr. No. 01 100 5122

Certificate Holder:

LAR Process Analysers AG
Neuköllnische Allee 134
D - 12057 Berlin

Scope: development, production, distribution and technical support of measurement-instruments for environmental and process analysis

Proof has been furnished by means of an audit that the requirements of ISO 9001:2008 are met.

The due date for all future audits is 30-04 (dd.mm).

Validity: The certificate is valid from 2014-05-19 until 2017-05-18.
First certification 1998

2014-05-21

TÜV Rheinland Cert GmbH
Am Grauen Stein · 51105 Köln

DAkkS
Deutsche Akkreditierungsstelle
D-ZM-16031-04-00

www.tuv.com

TÜVRheinland®
Precisely Right.

LAR Process Analysers AG
Neukoellnische Allee 134
12057 Berlin
Germany
Telephone: +49 30 278958-55, FAX: +49 30 278958-706
Email: service@lar.com
Web Site: www.lar.com

Operation Manual prepared by: LAR Process Analysers AG

1 Operating Principle

1.1 Toximeter

NitriTox® is a nitrification respirometer and a continuously working measuring device, which registers toxic ingredients of the continuously examined sample water by recording the respiration activity of certain microorganisms.

The NitriTox® bacteria toximeter cultivates the microorganisms required for the measuring process in a small fermentation vessel which is part of the device.

The cultivation is done

- without any contact with the sample water and its ingredients, preventing any habituation effects.
- while the metabolic activity of the microorganisms is measured and kept constant during the measurement.
- under specified, selective nutrient and living conditions, which provide a very tight spectrum of the microorganism, and high reproducibility of measurements.

The toxicity of the test water[1] is recorded according to a differential principle of the oxygen measurement. It is not simply the oxygen concentration resulting from the continuous flow-through a measurement cell that is measured, but the change of concentration during a fixed period of time is rated. The content of the measuring cell is not changing during this fixed period!

This method has great advantages making it a simple and reliable:

- During the measuring process the pumps in the device do not run, so that any possible irregularity of the pumps cannot influence the measurement!
- The method measures faster, because dead-times in the tubing system are minimized!
- The oxygen concentration of the test water may vary, because only the change of the oxygen concentration (oxygen respiration) is monitored.
- Nitrifying bacteria, similar as used in aerobic WWTP‘s, are used for measurements. Therefore: same sensitivity.
- No toxification of used biomass - only a subset is being used for the measurement in a separate measurement cell.

1. **test water = sample water and the aerated reference water (optional)**

1.2 What affects the measurement of toxicity

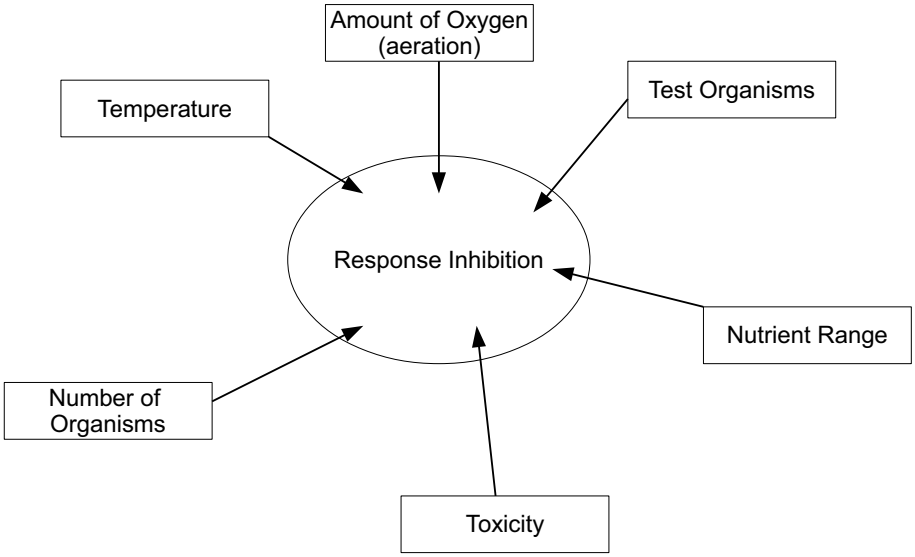

Fig. 1: Influencing factors on the measurement of toxicity

1.3 Application

- Protection of sewage sludge in the sewage treatment plant
- Protection of the nitrification process in a sewage treatment plant
- Laboratory application

The patented NitriTox® quickly recognizes the effects of pollutants on sensitive bacteria (nitrifiers), allowing the operator to early take counteractions.
A permanently self-regenerating bacteria culture of nitrifiers that is contained within the analyser allows the examination of water for dangerous ingredients within minutes. For each toxicity test a new subset of this culture is used.

2 Operational Control

Fig. 2: Front view of the control panel

Legend:

1) Touch screen
2) USB 2.0 interface

3 Preparing to Start

3.1 Safety instructions

Safety rules should be followed when handling chemicals.
Usually, the toximeter is used to analyse sewage. It often contains germs and dependant on the kind of sewage, it can contain varying amounts of dangerous substances.

Be aware of possible dangers of working with sewage. Use gloves, protective glasses and protective clothing if necessary!

Should any question arise during the operation of the analyser, please contact **LAR technical support (chapter 10.2, page 111).**

Unauthorized personnel shall not open the electrical housing.

All microorganisms cultivated in NitriTox® according to the instructions of LAR are a part of aquatic life and not dangerous. The chosen living conditions (e.g. the relatively low temperature in the cultivation container) guarantee that no germs can develop. However, to prevent any kind of infections, please follow the basic rules concerning hygienically unobjectionable working while handling NitriTox®.

Basically, the same safety instructions as for the handling of sewage during wastewater treatment plants must be followed while working with NitriTox®:

- Handling of nutrient solution: Since nutrient solution constituents are corrosive, you have to wear protective glasses and gloves.
- Do not keep any food within the process level of NitriTox®!
- Rinse splashes carefully if you get into your eyes. Wear protective glasses!
- Wash your hands after working on NitriTox® (e.g. after maintenance work).
- In case of existing inflammatory diseases of eyes, hands or fingertips always work with protective glasses and gloves.
- Wipe away any moisture, spilled or overflown nutrient solution inside the analyser immediately.
- Wipe away overflown fluid from the cultivation vessel, the measuring cell or leaking tube connections immediately!
- Do never suck up or pipette by mouth any fluids from the tubes of NitriTox®, from the cultivation vessel or from the measuring cell!

3.2 Reagents

3.2.1 Nutrient solution

The nutrients will be delivered as a nutrient concentrate by LAR AG. Only use the nutrient concentrate from LAR AG, so that a continuous operation of the analyser can be guaranteed. The water that is used must be free from Cl_2 (Chloride). If the analyser is run with measurement interval 30 min, the analyser needs nutrient solution approximately 3.6 l per day.
If there are questions or comments to this point, please contact the **LAR technical support (chapter 10.2, page 111)**.

1) Fill 5 litres of demineralized water into a beaker and insert a magnetic stirrer bar.
2) While continuously stirring transfer the contents of 1 bottle "Nutrient Concentrate" into the beaker.
3) Transfer the beaker content to the emptied and rinsed 10l container labeled "Nutrient Solution"
4) Add another 5 litres of demineralized water to the 10l container labeled "Nutrient Solution" and mix it with a stirring rod.

Note:
Make sure that the tubing is correctly put into the cartridges of the nutrient solution pump, since a continuous cultivation depends on reliable supply of nutrients reagent (chapter 3.4.3 on page 14).

3.2.2 Cleaning solution

After each measurement a cleaning solution is added. The cleaning solution prevents sediments. The different cleaning solutions depend on the application. Two cleaning solutions are described here. If the analyser is run with measurement interval 30 min, the analyser needs approximately 2l cleaning solution per day.

To make 10 litres of the cleaning solution (application: industrial water), please follow the instructions:
- Mix 100g NaOH with 20g EDTA and put into the supplied 1000 ml glass flask.
- Mix well.
- Fill 10ml of the prepared standard into a 10l canister and top up the container using demineralized water (Cl_2 free tap water).

Alternative to make 10l of the cleaning solution (Application: surface water monitoring and laboratory), please follow the instructions:
- Put 50g "Edisonite Super" into the supplied 10l-container.
- Top up the container to 10 l using demineralized water (Cl_2 free tap water).

Alternative (sample with fat or oil content):
- put 50g "Edisonite Super" and 20g NaOH into the supplied 10l-container.
- Top up the container to 10l using demineralized water (Cl_2 free tap water).

Note:
For different application, an other cleaning solution may be better. For that please contact the **LAR technical support (chapter 10.2, page 111)**.

3.2.3 ATU - solution

Keep solution of 1000 ppm ATU[2] (1 g Allylthiourea per liter demineralized water) on stock. For the measurement or calibration 1 ppm ATU solution is needed. For the dilution of 1 ppm ATU solution measure 10 ml of the stock solution and fill up to 10 l with demineralized water. If another concentration shall be used, please contact the **LAR technical support (chapter 10.2, page 111)**.

3.2.4 Growth powder solution

To prepare a growth power solution for about 1 week, mix 25 g of growth powder with 500 ml nutrient solution and with 500 ml demineralized water. The solution needs to be mixed carefully.
If there are questions or comments to that point, please contact the **LAR technical support (chapter 10.2, page 111)**.

3.2.5 Buffer solutions

When the shipment of the buffer solution pH 7 and pH 8 is not possible or to expensive, the two buffer solutions may be produced.

The instruction of the buffer solutions are for 1 l. Please measure all chemicals and fill them into 1 l flask. Fill the beaker fill up 1 l with distilled water. All substances must be completely dissolved. That can be done by stirring the solution. After that, check the solutions with the pH meters. Fill the buffer solution in a suitable beaker with lid.

pH 7	3.52 g potassium phosphate + 7.26 g di-sodium hydrogen phosphate
pH 8	4.77 g borax ($Na_2B_4O_7$ * 10 H_2O) + 205 ml hydrochloride acid (c = 0.1 mol/l)

On preparating the pH8 buffer solution please note the calculation of the 0.1 mol/l hydrochloride acid (HCl):
To prepare a 0.1 mol/l hydrogen chloride solution, 8 ml of 25 % hydrogen chloride needs to be mixed with in 1 l distilled water.

These two buffer solutions can be stored in a refrigerator for approximately 3 weeks.

2. ATU = Allylthiourea $C_4H_8N_2S$
   - a white crystalline compound
   - nitrification inhibitor

3.3 Filling the fermentation vessel

There are three possibilities to fill the fermentation vessel and to start a new culture:

1) with the biomass culture from LAR (4 l),
2) with supplied nitrifying culture by LAR with demineralized water or
3) with nitrifiers from a WWTP

Note:
- The two LAR cultures are more convenient and faster.
- When filling the fermentation vessel and waiting of activity of the bacteria do not should down the toximeter: the best development of the culture requires aeration, temperature control and dosage of nutrient solution.

The required times, to reach active biomass, depend on the following factors:

1) duration of resting period of the nitrifiers or/and
2) storage temperature and period. The lower the temperature and longer the resting period, the more time is needed to reach the suitable dosing and temperature levels for the active bacterias.

3.3.1 Biomass culture from LAR (4 l)

By using the biomass culture from LAR please take care about the time stated (factors of the required time).
Fill the 4l of the biomass culture into the fermenter and wait until the dosing value is about 160 -200 ml/h.

3.3.2 Nitrifying culture by LAR

- Fill the supplied nitrifiers (2l) into the fermentation vessel.
- Fill 2l demineralized water onto the culture.
- In addition fill in 5 ml nutrient solution.
- Growth powder must be present and will be added automatically by the software.

Watch the pH (Fig. 8: on page 18). After a while (approximately 30 minutes) the pH will begin to decrease. The pH value will decrease until the set the set pH level is reached, which is 7.6 by default. At this point of the start-up process, the pump for the dosage of nutrient solution will begin to work. From now on the pH value will stay constant and the measurement parameter "dosing" will start to increase. When a dosing rate of 160 -250 ml/h is established, the NitriTox® is ready for a calibration and first measurements.

3.3.3 Nitrifying culture from a WWTP

Fill thickened biotank effluent in the fermentation vessel. When a dosing rate of 160 -250 ml/h is established, the NitriTox® is ready for a calibration and first measurements.

3.4 Tubing installation

NitriTox® is delivered completely assembled with exception of the two sensors, some tubing, the bacteria in the fermenter and filter balls.
For transport purposes only, the tubing is removed from the tubing valve and pumps to protect them.

Please Note:
For the transport the tubes are removed from the pumps and pinch valves to preserve from damage. Please put the tubes in the tube pinch valves (chapter 3.4.1, page 12), tubing pumps (chapter 3.4.2, page 13) and nutrient solution pump (chapter 3.4.3, page 14).

Please put the tubing into the respective pump head according to the following guidelines of the next pages.

3.4.1 Putting the tubing into the tube pinch valves

The tube pinch valves are placed inside of the analyser on the left side and also on the right side of above the biomass return.
Inserting the tubing is done as follows (see figure below):

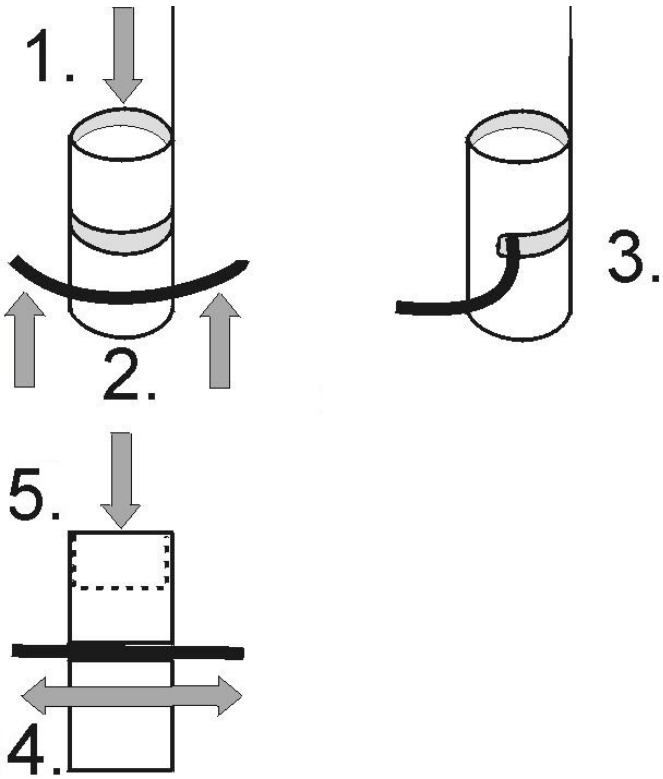

Legend:
1) Push the valve piston into the valve as far as it will go.
2) Insert the tubing into the notch, make sure to insert the tubing as far as possible on both sides.
3) While still pushing the piston down,
4) move the valve tubing back and forth in tubing direction several times.
5) Relieve the valve piston.

Fig. 3: Putting the tube into the pinch valves

Note:
The solution will flow back into the canister, if the tubes are not fitted correctly in the pinch valves.

3.4.2 Peristaltic pump

1) Stop the measurement with the red offline button (if online).
2) Open the pump head by moving the upper part upwards.
3) Insert the tubing. Make sure that it is firmly attached to the rollers (make sure that the tubing is placed upon the guide on both sides. Stretch the tubing carefully downwards on both sides with your hands.)
4) Close the pump head by moving the upper part downwards.

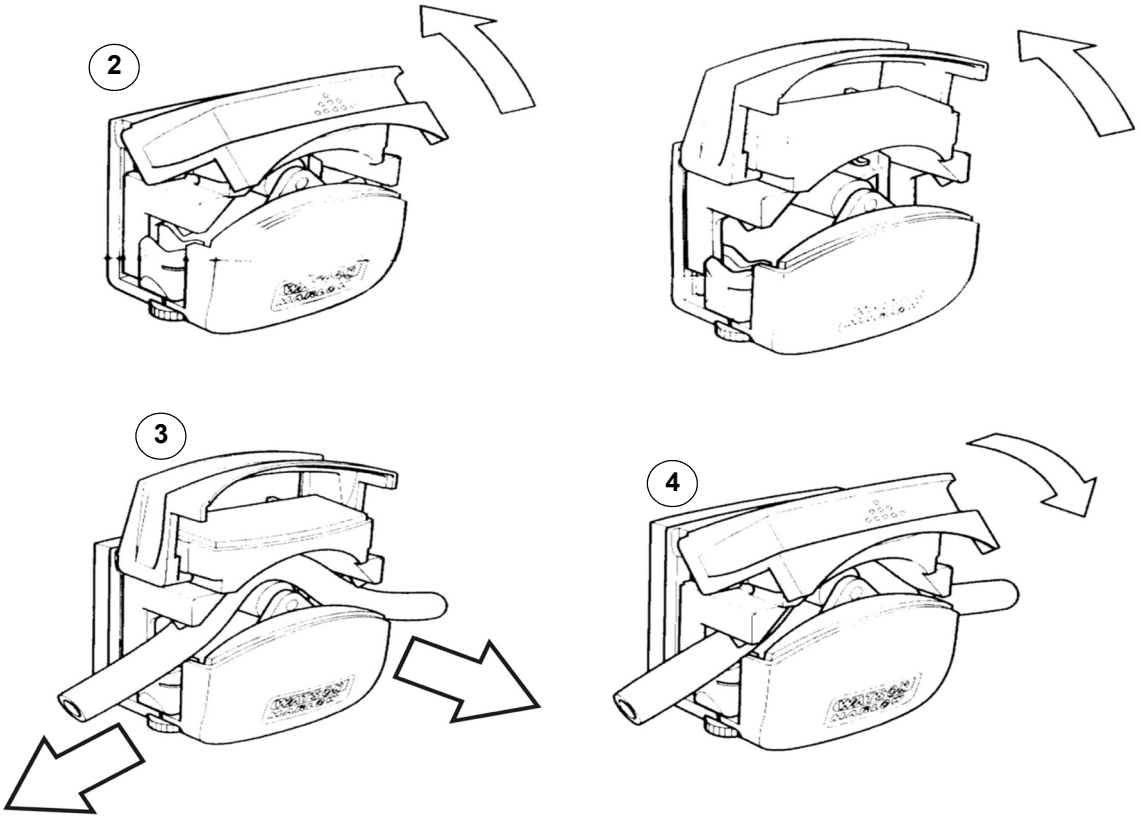

Fig. 4: Inserting the pump tubing into the peristaltic pump (sample pump)

Note:
Do not change the adjustments of the small wheels on each side of the pump head! They are preset for the specified tubing. Changing of the adjustments may cause a poor pump performance (please see → point 6.3) in chapter 5.3, page 66 ff.).

3.4.3 Nutrient solution pump

Safety instruction:
Although the pump motor is only operating with a low torque, there is a risk of injuries if the tubing is handled during pump activity. Therefore, before opening the protection cap of the pump, the toximeter must be switched off!

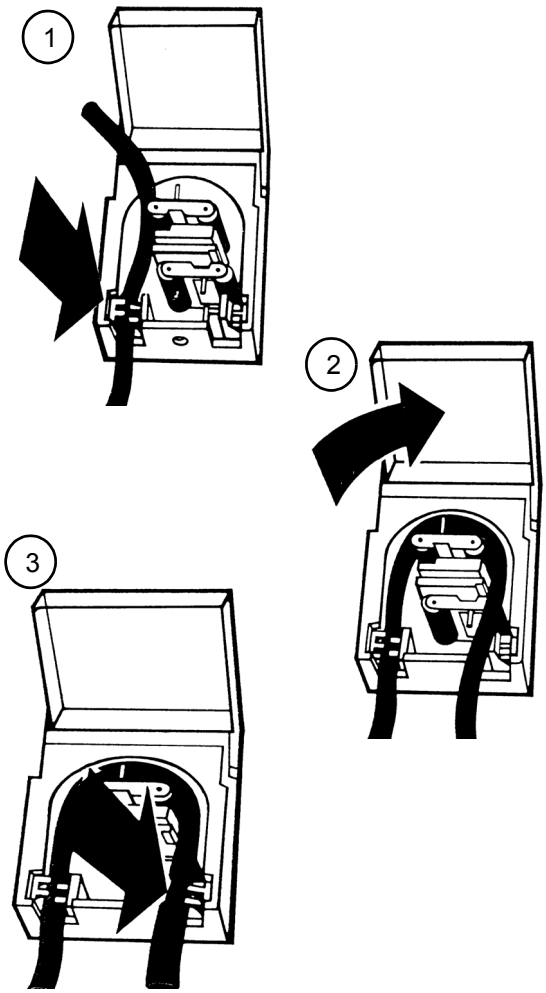

Legend:
To insert the tube, open the protective flap. The tube is put in the first tube clip, which holds it through its spring tension.

By turning the rotor at the frontal bar with your second hand, the tubing can be easily laced-up between the rotor and the tubing cartridge.
Please make sure that the tubing is not twisted and is preferably located in the middle of the rotors lateral guide pins.

Then, the tubing is fed through the second (right) tube clip. Make sure that it is lying well-balanced and close to the tubing cartridge. The tubing must not be tightened over the rotor in order to avoid a reduction of the tubings cross-section and of the pumps delivery volume.

Fig. 5: Inserting the pump tubing into the nutrient solution

3.4.4 Flow Diagram

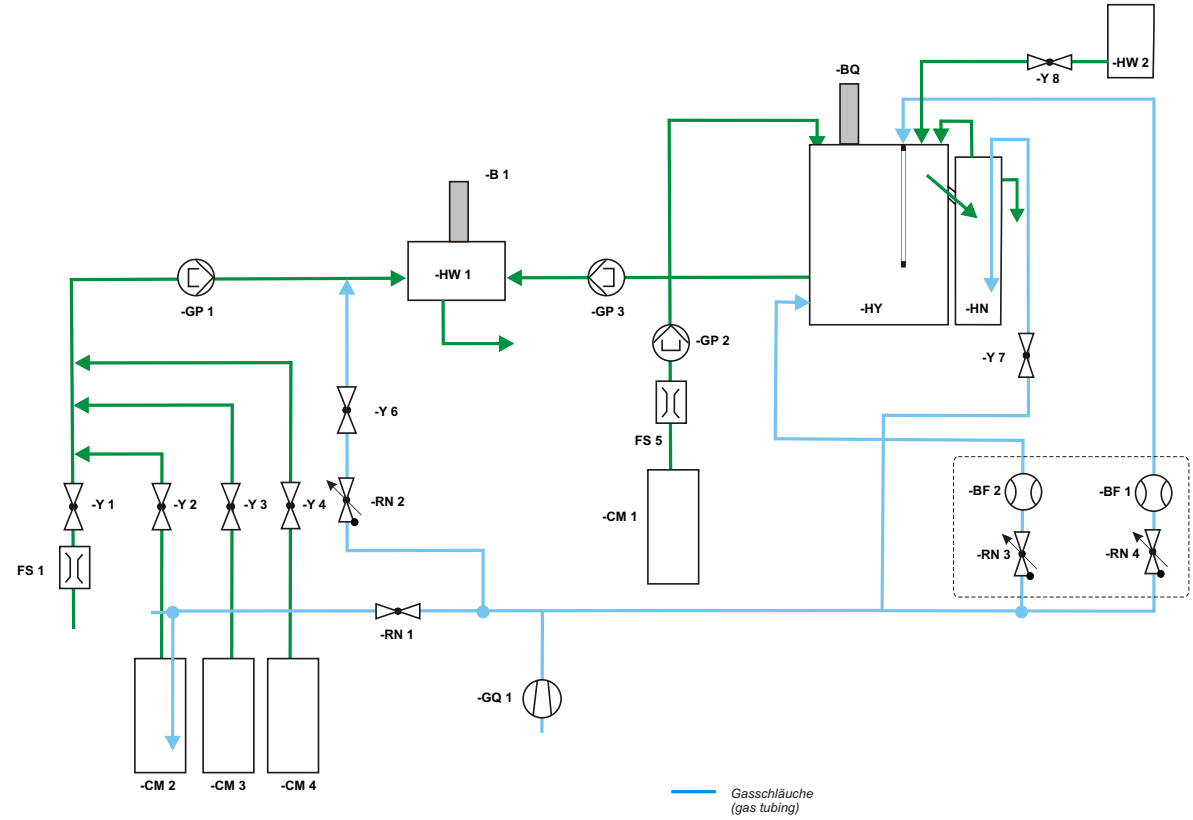

Fig. 6: Flow Diagram

Table 1: Key of the flow diagram

Short	Description
B	Oxygen sensor
BF	Flow sensor
BQ	pH sensor
CM	Solution vessel
GP	Pump
FS	Fluid sensor
GQ	Air pump
HN	Biomass Refeed (BMR)
HW 1	Measurement cell
HW 2	Growth powder unit
HY	Fermentation vessel
RN	Critical nozzle / choke
Y	Valve

3.5 Front view

Fig. 7: Overview of the analyser (look into the analyser)

4 How to Work with NitriTox®

Note:
Chapter 4 page 17 describes the NitriTox® software. If you have any comments or suggestions for improvements, please let us now (chapter 10.2, page 111 ff.).

4.1 Start-up check list

After completing the installation described in chapter 8, page 85 ff. and the preparations described in chapter 3,page 7ff., the toxicity analyser can be started up by the LAR technical support or by one of their distributors. During the start-up, the LAR technical support or a person authorised by LAR will be set up the NitriTox®, according to the list below.

Table 2: Check-up list overview

Task	Sections and Figures
1) Check if drain for all liquids is present	Fig. 6:, page 15
2) if existing: check if sample inlet of NitriTox® is connected to the FlowSampler® (optional)	chapter 9.1, page 101 ff.
3) Check if nutrient solution is prepared	chapter 3.2.1, page 8
4) Check if cleaning solution is prepared	chapter 3.2.2, page 8
5) Fill in reference water and put the aeration stone in place	chapter 8.4.3.5, page 99
6) Check if stirring magnet is inserted in the measurement cell	chapter 8.4.3.1, page 95
7) Check if oxygen sensor is assembled and connected	chapter 8.4.3.2, page 96
8) Check if pH-sensor is assembled and connected	chapter 8.4.3.3, page 97 ff.
9) Check if all tubes are put in the pinch value and tubing pumps	Fig. 6:, page 15 chapter 3.4, page 11 ff.
10) Starting the NitriTox® operating system	chapter 4.2, page 19
11) Filling the fermentation vessel with biomass	chapter 3.3, page 10 ff.
12) Calibrate pH sensor	chapter 4.4.5 on page 37
13) Check if growth powder solution is present	chapter 3.2.4 on page 9
14) Check if the temperatures (measurement cell, fermenter and ambient air) are ok If the temperatures are incorrect, please contact the **LAR technical support (chapter 10.2, page 111)**	Fig. 8:, page 18
15) Calibrate oxygen sensor	chapter 4.4.4 on page 34

Should any question arise in relation to any of these tasks, please contact the **LAR technical support (chapter 10.2, page 111).**

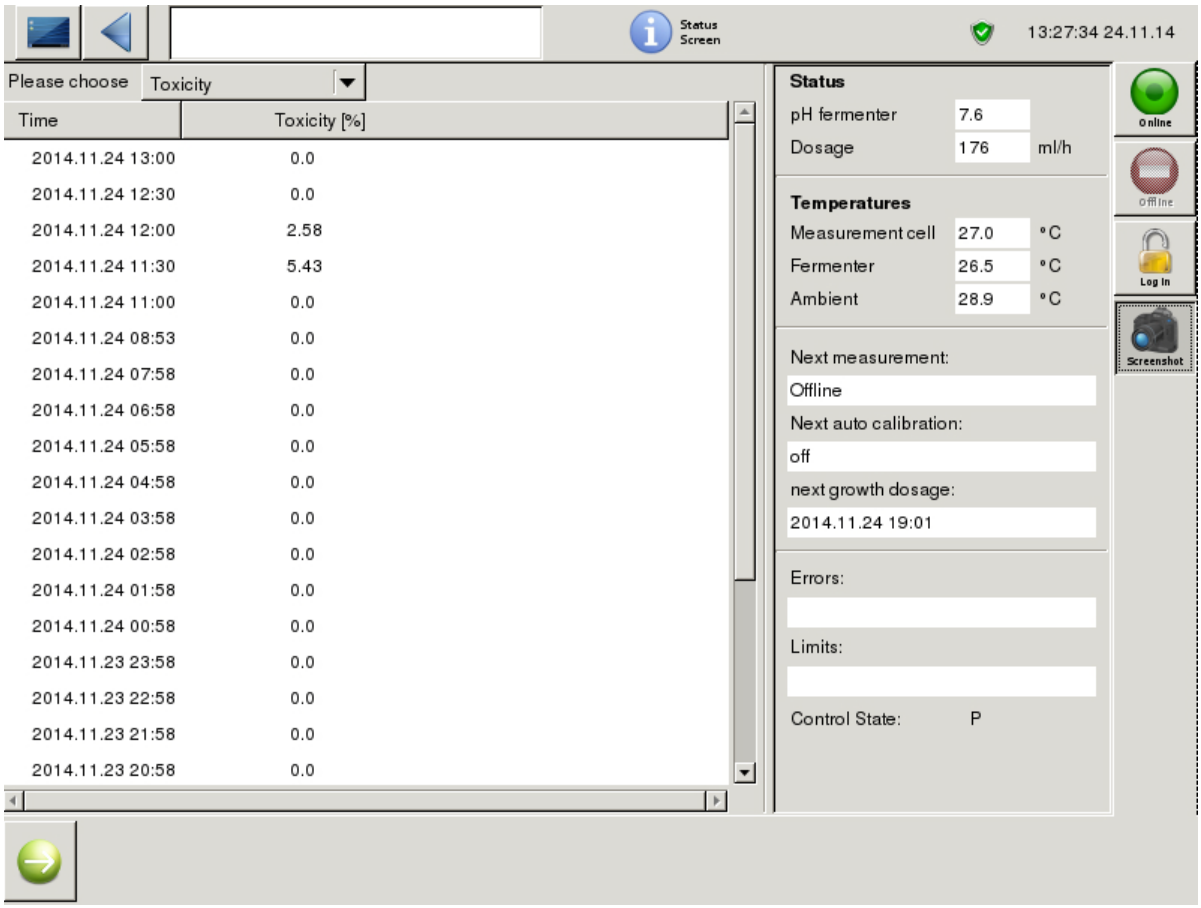

Fig. 8: Status screen (example)

4.2 Operating software

4.2.1 Starting

Turn “ON“ the main switch (Fig. 9:) on the right side of the housing, having completed all tasks on table 2, page 17. After being switched on and finalising the boot - process, the operating program will start and show an introductory screen (Fig. 10:, page 20). On the introductory screen, a login - window (Fig. 10:, page 20) will appear. The **default password is: lar** for level II access (chapter 4.4.7.3, page 41). Press the green “check mark“ (Fig. 10:, page 20) without a password to get access to user level I.

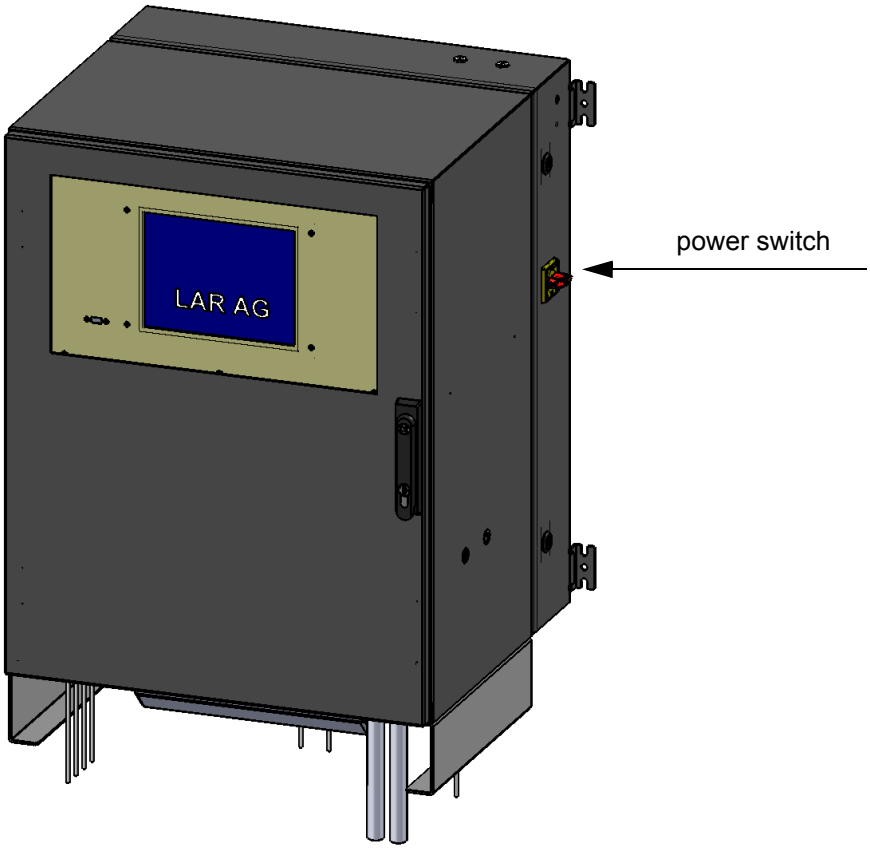

Fig. 9: Power switch of the NitriTox®

On the first starting up, the toximeter analyser will go into offline mode (standby). After an electrical power cut or switching off, the analyser will go back to its last mode (online or standby), after it is powered on again.

Note:
Do not switch on the analyser without the LAR technical support or a LAR authorised person. Otherwise the analyser is warranty becomes invalid!

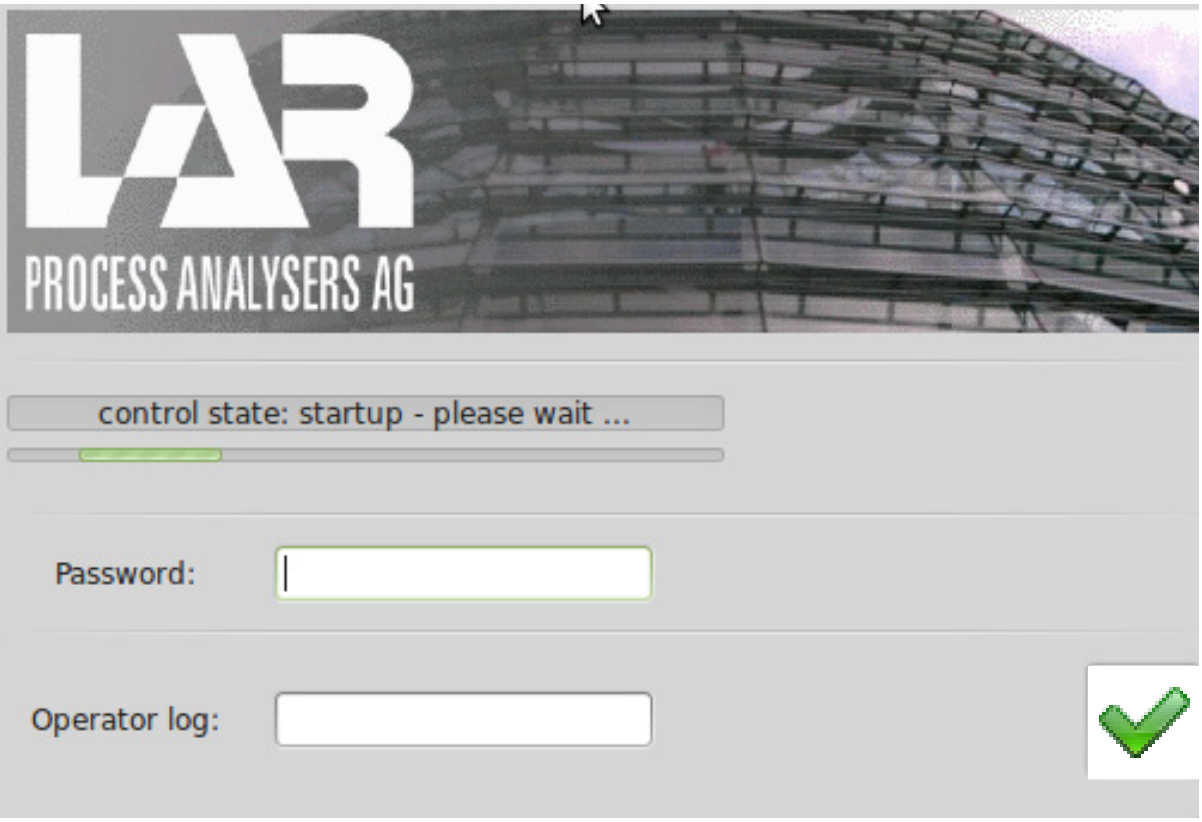

Fig. 10: Login-window

Fig. 11: Introductory screen with analyser serial number and software version

Please make sure that all necessary steps for preparing the analyser for operation (table 2, page 17) are completed.
After pushing the green “online“-button (Fig. 12:) the analyser will go to the measurement mode.

The online mode can be started.

The analyser is in operation mode (e.g. measurement, calibra tion, maintenance or so on)

Fig. 12: Online button

Note:
After pressing the green “online“ button the respirometer will change to the measuring mode. To cancel a measurement or any other running operation press the red “offline“-button below.

4.2.2 General remarks concerning the operating software

It is not necessary to memorise any commands to operate the toximeter. The toximeter offers a variety of functions on a screen to choose from.

4.2.2.1 Access right / operator levels

There are two user levels with different access rights (see Fig. 13:, page 22 and Fig. 14:, page 23).
The first level is the “measurement overview“ level. In this level the user has access to the introductory and measurement screens (measurement values and measurement curves).
The second level is the “operator“ level with additional options in comparison to level I. This level includes the status, measurement parameters, limit settings, pc settings, relay setting, calibration for pH and oxygen sensor, data bank, rinsing parameters, signal curve and the analog out test. Access to Level II is granted by a password or a USB stick. The password is protected and can be created by the customer. To access level II for the first time, type in the default password (see chapter 4.4.7.3, page 41).

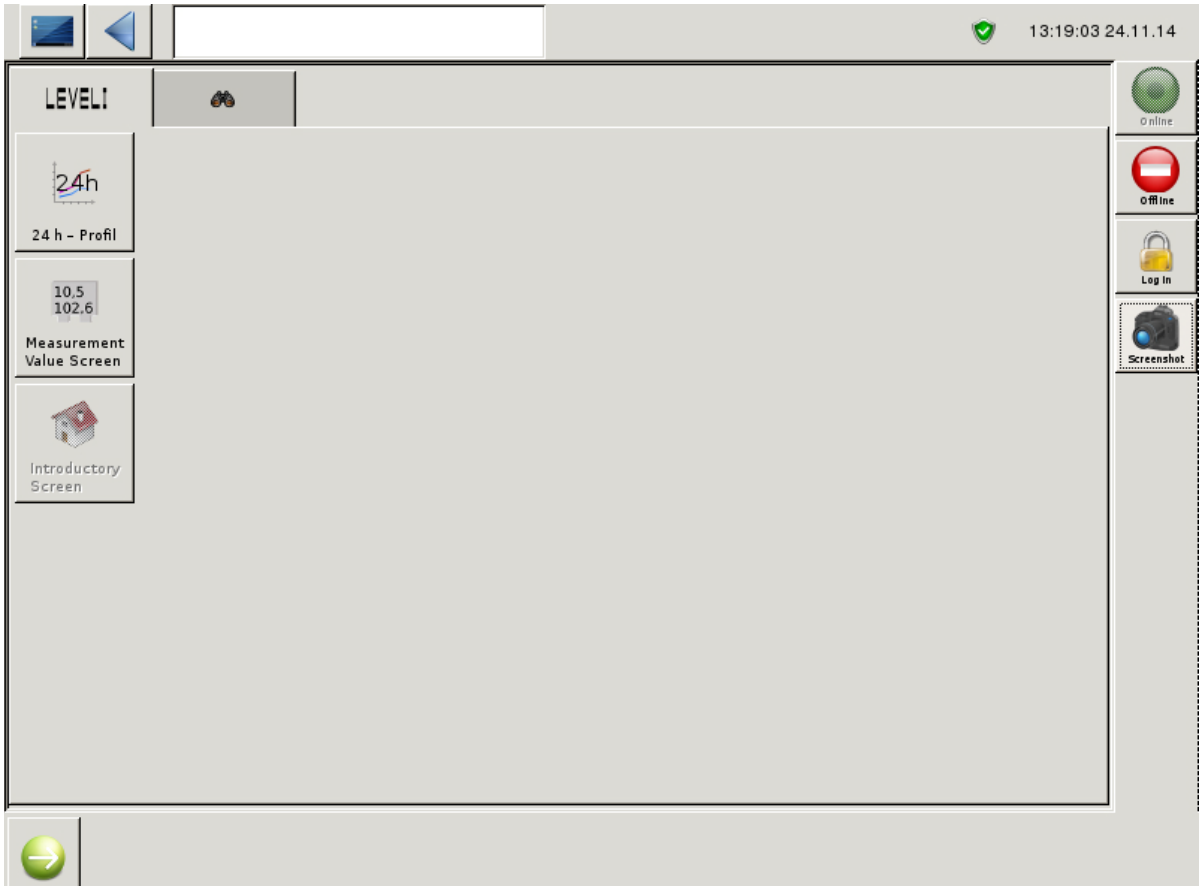

Fig. 13: Menu system - level I

Note:
The modules „measurement value screen“ and „24 h- Profile“ that are shown in menu level I are only available when a measurement is carried out. When the measurement is stopped, these modules are greyed out and the module „introductory screen“ will be activated.

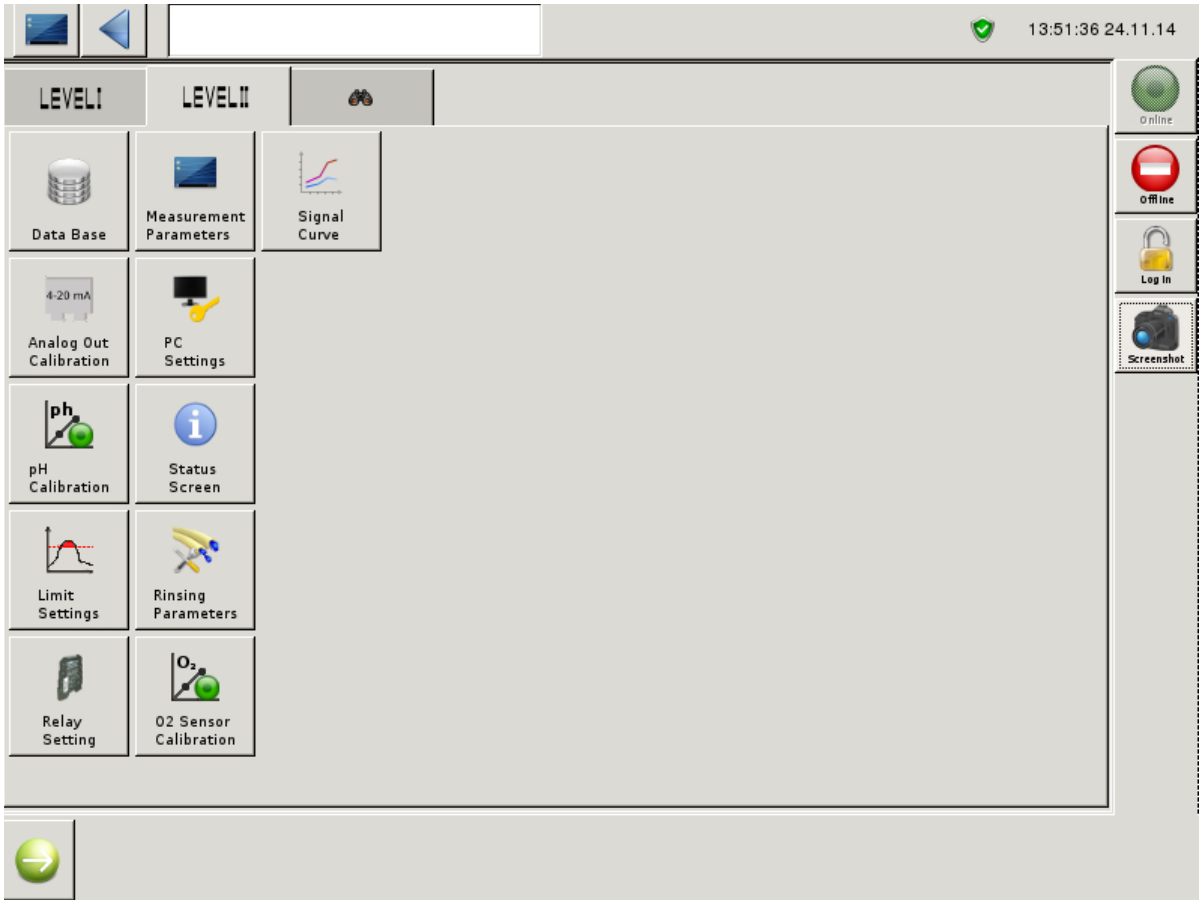

Fig. 14: Menu system - level II

To enter any screen shown above please push the related function button.

Fig. 15: Keyboard and keyboard button

4.3 What happens during the measurement?

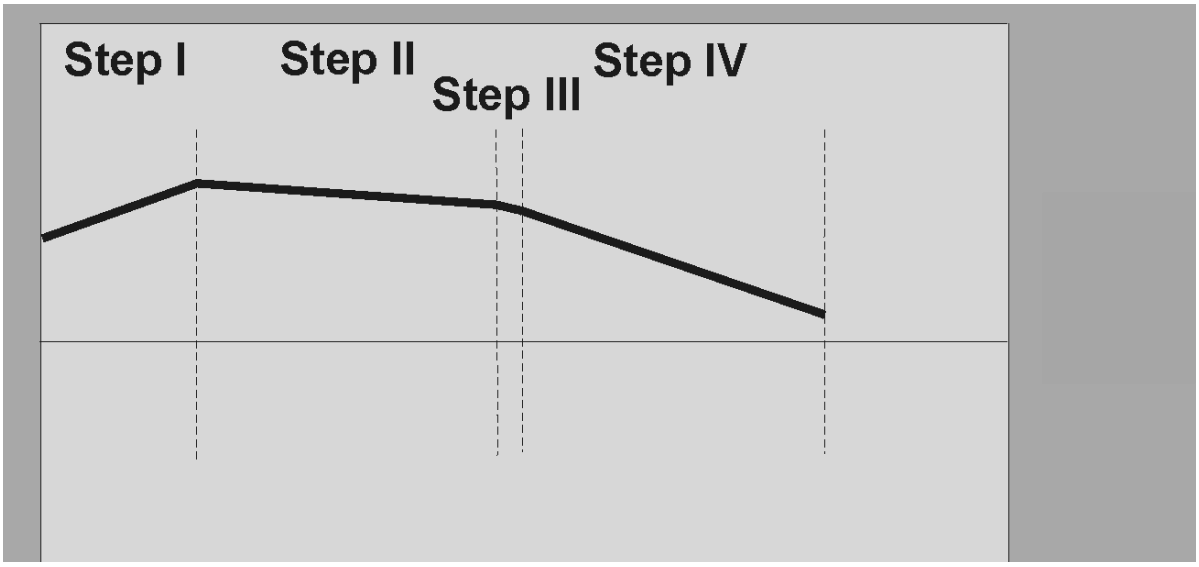

Fig. 16: Measuring signal in case of toxic event (example)

Step 1: The present aerated test water or sample is filled into the measuring cell and optionally aerated.

Step 2: The flow into the measurement cell stops. A stable sample temperature in the measuring cell is awaited.
Respiration of the test water or sample is measured.

Step 3: The biomass (nitrifiers) is added.

Step 4: The inflow to the measurement cell stops, the change of the oxygen concentration is recorded:
A decrease of the respiration activity of the microorganisms causes less use of oxygen in the measurement cell and indicates a toxic event (Fig. 17: on page 24)

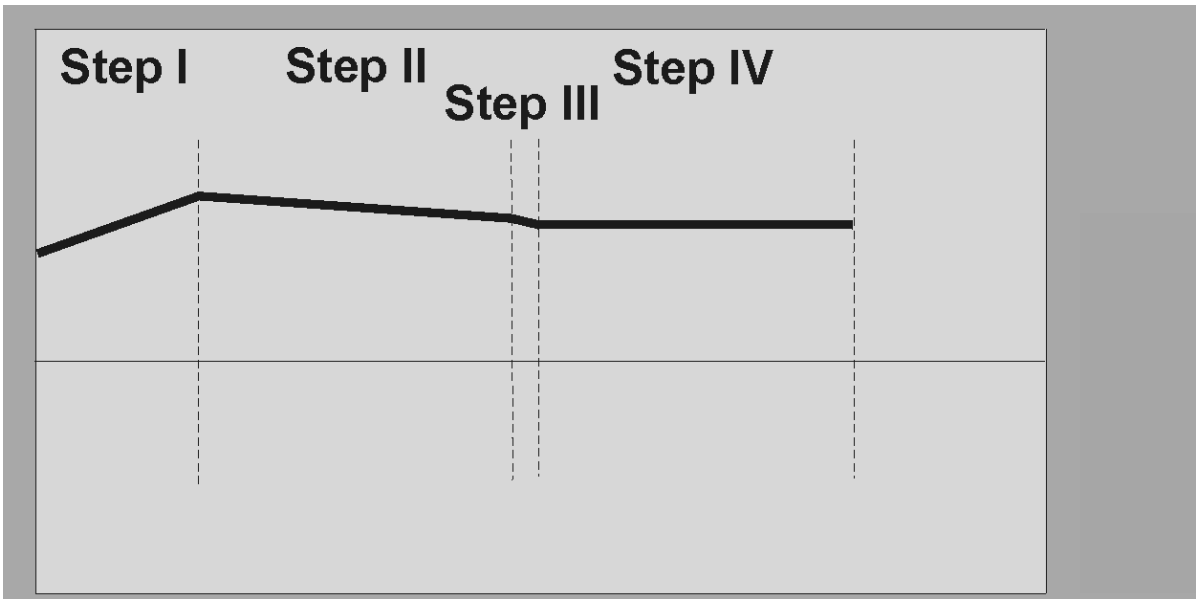

Fig. 17: Measuring signal in case of toxic event (example)

The recorded change of the oxygen concentration (O_2 respiration) of the sample water is compared with the oxygen respiration which was determined during the most recent calibration with nontoxic, demineralized, aerated water (reference measurement). The NitriTox® allows adjustable calibration frequencies ranging from 1 to 4 calibrations a day. The user may choose the calibration should include the measurement of a toxic ATU - solution. If 10 ppm ATU is measured (example), it is a 100% toxicity.

From the ratio of the oxygen respiration (given in "mg/l /min") of the test water and of the reference water, a so-called "toxicity" is calculated, displayed and stored.
When the test water shows the same oxygen respiration like the nontoxic, clean reference water, the toxicity is 0%. When there is no oxygen respiration in the test water, the total inhibition (100% toxicity) took place.
The user may divide the toxicity measurement range from 0% to 100% into 3 individual valuation ranges:

nontoxic	e.g. 0-25%
weakly toxic	e.g. 25-50%
toxic	e.g. 50-100%.

Reference water, cleaning solution and reference water will be added after each measurement. It should prevent sedimentations in the measurement cell by removing remaining sample and nitrifiers. The cleaning solution will be rinsed with reference water after a constant residence time.

4.3.1 Toximeter structure

NitriTox® basically consists of 5 assembly groups (see Fig. 18:)

- Measuring cell for the sample measurement
- Fermenter with nitrifiers (biomass)
- Biomass refeed unit (BMR)
- Growth Powder unit
- Data recording and processing (computer)

An integrated computer is responsible for the data recording and processing as well as for the control of the bacteria culture to a given concentration and the control of the sample exchange.

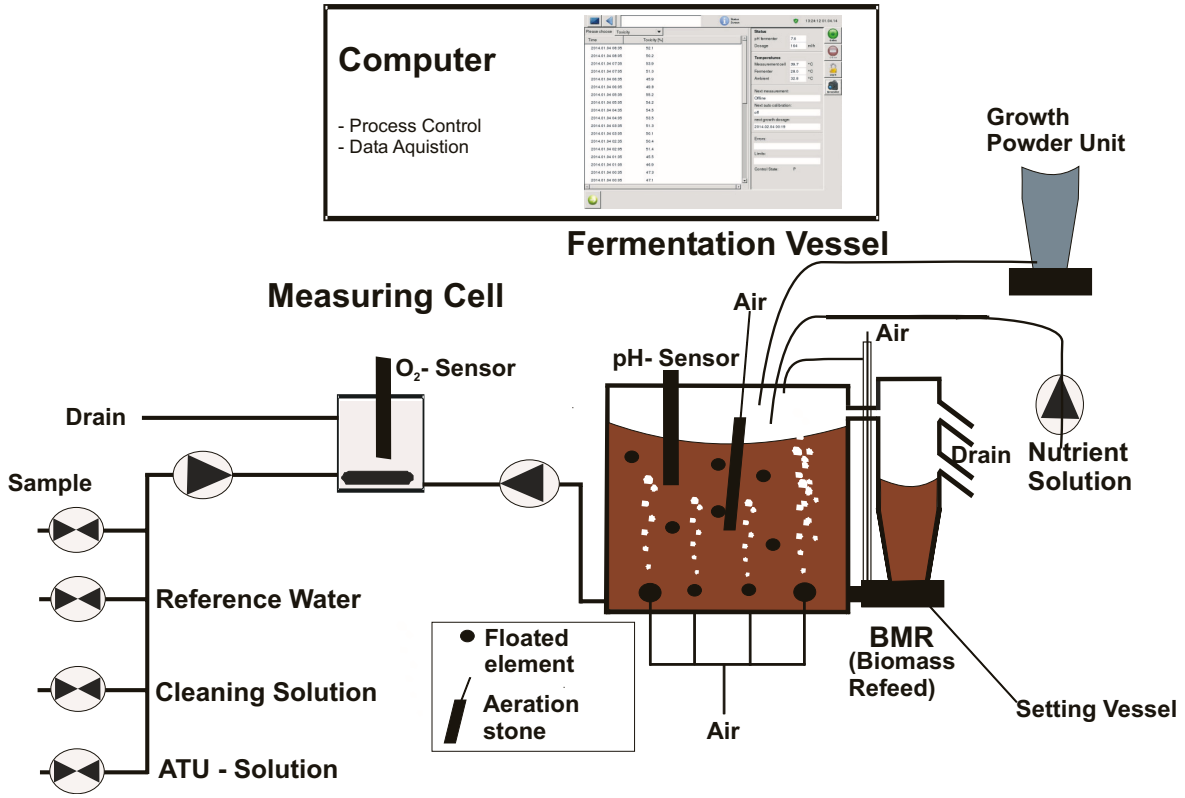

Fig. 18: Assembly groups of NitriTox®

4.4 Configuration

4.4.1 Adjusting the operating parameters

In level II the parameters for measurements, calibration, relay settings, operator password and date/time are already set.
To adjust these settings for specific requirements, the following steps are necessary and should be done before starting a measurement:

1) Adjustment of the measurement parameters (chapter 4.4.2, page 28 ff.)
2) Setting limits (chapter 4.4.12, page 46)

Note:
Some values are set by LAR technical support or authorised personnel. All values depend on the application and have to be adapted to the application. To change the values of the parameters, please contact the **LAR technical support (chapter 10.2, page 111)**.

4.4.2 Measurement parameter

In this menu, which is available in level II, all measurement parameters can be set. After setting all measurement parameters, the measurement can be started with the green “online“ button. Three screens show the measurement values:

- Measurement value screen in Level I,
- Status screen in level II and
- Data base in level II

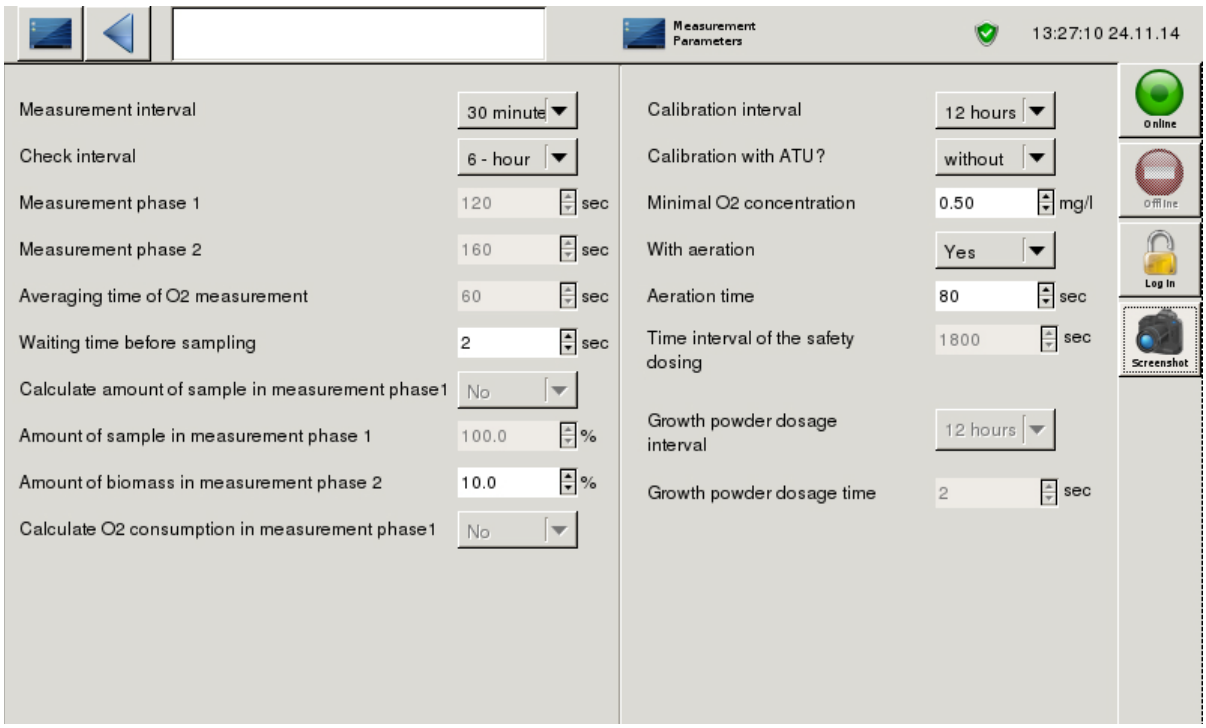

Fig. 19: Measurement parameter screen (example)

4.4.2.1 Measurement interval

In this selection field the measurement frequency can be chosen.
Also the option "remote control" can be selected. If remote control is activated, a digital signal (24 V) must be sent to the digital input 0 to start the measurement.

Minimum time interval:	5 min
Maximum time interval:	24 h
Default:	30 min

It may happen that the culture growth does not allow the set measurement frequency. In this case the “control state“ will state "waiting for enough dosing" and the measurements will not be performed until enough biomass has been rebuilt. When the culture growth stays constant on this level, the adjusted measurement frequency will be established.

Note:
A measurement interval < 10 min may empty the fermenter vessel. If this measurement interval is desired, please note that the other parameters must be changed also.

4.4.2.2 Check-Interval

The parameter “Check-Interval” can be used to make sure that the system is able to make a correct measurement. The settings can be adjusted in the screen “Measurement Parameters” in level II.

Minimum time interval:	6 sec
Maximum time interval:	72 sec

To use the “Check-interval” a sample with a known toxicity has to be connected to the ATU-tube. In the screen “Limit-Settings” (Level II) the limit of the measured value can be defined. Therefore one of the “Limits” has to be put on “Check”. After that the minimum value and maximum value have to be defined. If the measured value exceeds or undercuts these limits, it is shown in the status-screen (Level II).

The measured “Check-Value” can be seen in the “Status-Screen” (Level II, chapter 4.4.11 on page 45) and the “Measurement Value screen” (Level I, chapter 4.4.8 on page 42).

4.4.2.3 Measurement phase 1

This is the duration, in which the sample is pumped into the measurement cell,tempered and measured for its own respiration.

Default:	120 sec

4.4.2.4 Measurement phase 2

This phase starts first when the sample is measurement together with the biomass, so it is the length of the measurement with nitrifiers.

Default:	180 sec

4.4.2.5 Averaging time of O_2 measurement

Here the measurement time for the calculation of the oxygen respiration is set. It is possible to set a value from 20 to 60 seconds, but the optimal value can be found by taking the value set for measurement interval 2,dividing it by 3 and pull off 20 of this value. (Optimal input value) = 1/3(Value set for "measurement phase 2") -20.

Default:	60 sec

4.4.2.6 Waiting time before sampling

This is the period of time that the analyser waits before pumping the sample into the measurement cell.

Minimum time interval:	0 sec
Maximum time interval:	200 sec
Default:	2 sec

4.4.2.7 Calculate amount of sample in measurement phase 1

The sample can be diluted with reference water in the first measurement phase. If “yes“ is selected, the dilution will be calculated in the first measurement phase and taken into account in the toxicity measurement. For this setting please contact the **LAR technical support (chapter 10.2, page 111)**.

Default:	No

4.4.2.8 Amount of sample in measurement phase 1

This parameter is for diluting the sample. For the dilution two parameter must be set.
- Calculate amount of sample in measurement phase 1
- Amount of sample in measurement phase 1

Example: 50 % amount of sample in measurement phase 1, effects a dilution of 1:1.

Default:	100 %

Note:
If a dilution from the sample should be done, the parameter “calculate amount of sample in measurement phase 1“ must be activated (YES). For this setting please contact the **LAR technical support (chapter 10.2, page 111)**.

4.4.2.9 Amount of biomass in measurement phase 2

This parameter corresponds to the amount of biomass that should be pumped into the measurement cell compared with the real measurement volume. Please adapted the parameter to the application.

Minimum amount:	5 %
Maximum amount:	30 %

4.4.2.10 Calculate O_2 consumption in measurement phase 1

If “yes“ is selected, then the consumption (gradient of the curve) will be calculated. The calculated value will be given under the signal curve in mg/l/min and taken into account. “Yes“ should be selected when the samples‘ own consumption is under -0.4 mg/l min.

Default:	No

4.4.2.11 Calibration interval

The toxicity value is constructed by comparing to oxygen respiration of the current water sample with that of the reference water. It is important that the oxygen respiration of the oxygen saturated, ventilated and fully deionised reference water is measured in regular intervals. The frequency of these measurements can be set here.

Minimum time interval:	off
Maximum time interval:	72 h
Default:	12h (2 per day)

4.4.2.12 Calibration with ATU?

The measuring of the toxicity standard (1ppm ATU) can be carried out with every calibration. The valve for the ATU measurement is located parallel to valves for the sample, reference water and cleaning solution. It is possible to carry out a calibration with or without ATU.

Default:	without

4.4.2.13 Minimal O_2 concentration

The minimum oxygen concentration which can remain at the end of the second measurement phase can be set here. A normal respiration is above 0.5 mg/l. If the value is smaller than set, an error notification will appear, and the measurement will be discarded.

Minimum concentration:	0.5 mg/l
Maximum concentration:	1.0 mg/l
Default:	0.5 mg/l

4.4.2.14 With aeration

Her it can be set when the sample should be aerated in the measurement cell before the measurement. If the oxygen concentration is less than 4.0 mg/l at the end of measurement phase 1 then the aeration should be turned on.

Default:	Yes

Note:
After one measurement the value can be checked in this menu and the parameter may be changed.

4.4.2.15 Aeration time

If the sample has to be aerated, then the time interval for aeration has to be set here. This parameter depends on the application.

Minimum time interval:	20 sec
Maximum time interval:	100 sec
Default:	80 sec

4.4.2.16 Time interval of the safety dosage

This safety dosage has been for the feeding in a non secure operation status, to keep the bacteria active.

Default:	20000 sec

4.4.2.17 Growth powder dosage interval

This setting is for the periodic addition of the growth powder solution. The number to be set is the number of times per day.

Default:	1

4.4.2.18 Growth powder dosage time

This parameter is the duration of the dosage in seconds.

Default:	5 sec

4.4.3 Rinsing parameters

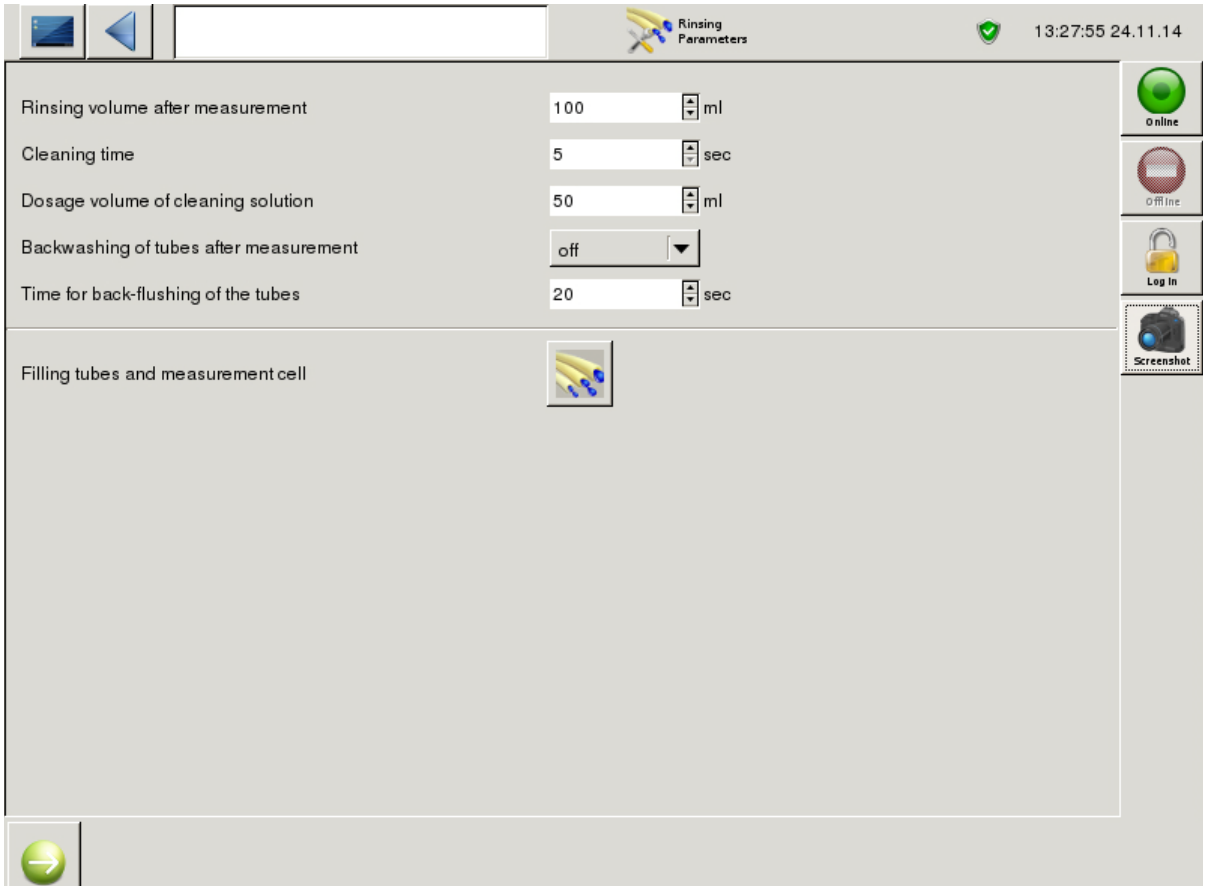

Fig. 20: Rinsing parameter (default values)

4.4.3.1 Rinsing volume after measurement

Here the volume of reference water is set that will be used for rinsing after each measurement.
.

Minimum volume:	100 ml
Maximum volume:	300 ml
Default:	200 ml

4.4.3.2 Cleaning time

Duration of cleaning solution in the measurement cell after measurement.

Minimum time interval:	5 sec
Maximum time interval:	20 sec
Default:	10 sec

4.4.3.3 Dosage volume of cleaning solution

Dosing volume of the cleaning solution after measurement in the measurement cell.

Minimum volume:	20 ml
Maximum volume:	100 ml
Default:	50 ml

4.4.3.4 Backwashing of tubes after measurement

With this parameter the tubes for the sample and biomass outlet should be emptied or not (Yes/No). The backwashing is recommended when the sample does not contain particles.

Default:	No

4.4.3.5 Time for backflushing of the tubes

If the parameter “backwashing of tubes after the measurement“ is set on “Yes“, this parameter needs to be set too. The longer the tubes are the longer the set time should be.

Minimum time interval:	5 sec
Maximum time interval:	30 sec
Default:	20 sec

4.4.4 O_2 Sensor Calibration

During online mode the oxygen sensor will be re- calibrated automatically in regular time intervals. Frequency may be adjusted in menu measurement parameters (chapter 4.4.2.11, page 30).
The "manual" calibration should be carried out when:

- the device is put into operation for the first time,
- as part of the maintenance (table 4, page 64) or
- an exchange of the oxygen sensor has been exchanged.

Note:
If a automatic calibration failed after three times, the error message „E1935“ will shown and the tox-imeter will take out from the measurement. Now, a manual measurement has to be carried out and passed.

It is necessary to have the (aerated) reference water and the cleaning solution connected in order to carry out a calibration. Press the button “calibrate oxygen sensors“ to begin a manual calibration. The entire procedure can be viewed in the status bar and as a curve. To view the signal press the button “oygen sensor plot“..

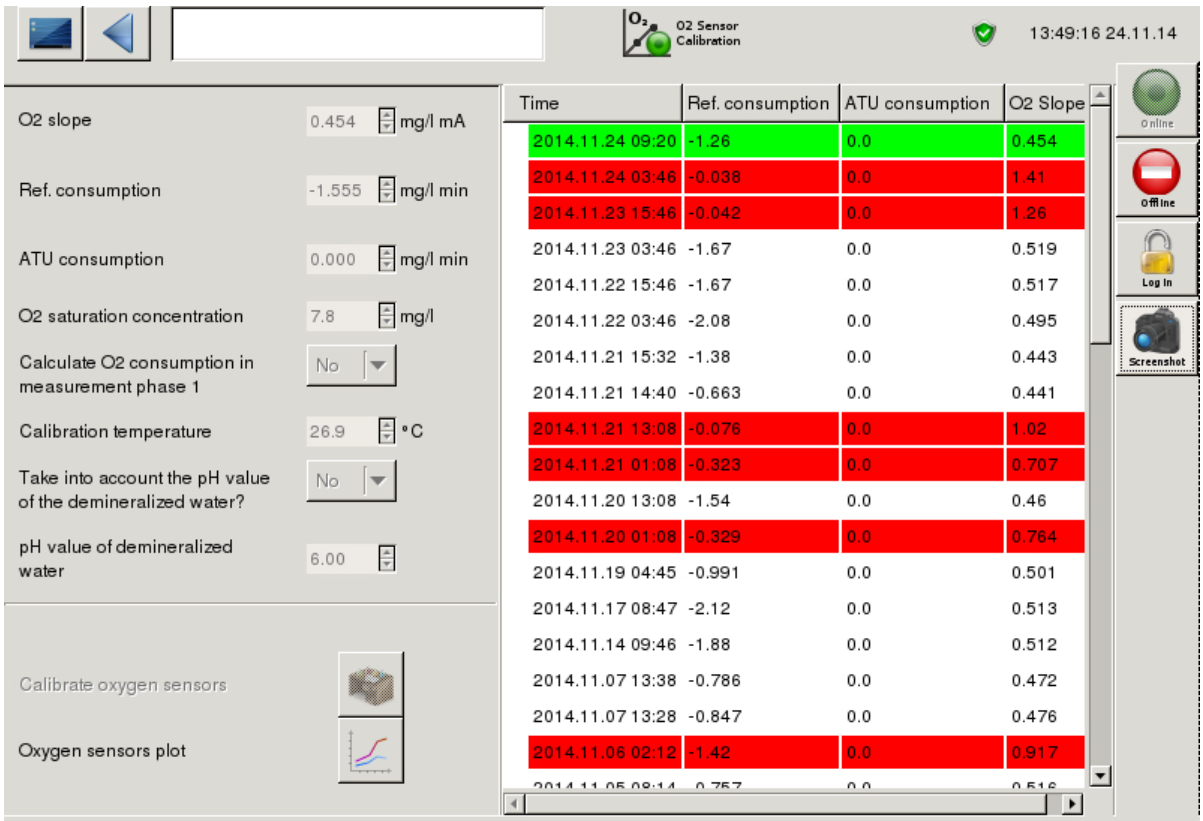

Fig. 21: O_2 sensor calibration (example)

4.4.4.1 O_2 slope

This value is calculated at the end of the second measurement phase, and is changed in order to calculate an O_2 concentration from the O_2 electrode. This parameter can only be viewed.

Default: 0.6 mg/l mA

4.4.4.2 Ref. consumption of last calibration

This is a reference value at which the oxygen consumption is measured and filled in here.
This parameter can only be viewed.

Default: -1.0 mg/l mA

4.4.4.3 ATU consumption

This is the oxygen consumption of the last measurement with toxic standard (ATU solution). This parameter can only be viewed.

Default: -0.2 mg/l mA

4.4.4.4 O_2 saturation concentration

This is the amount of oxygen necessary to saturate 1l of reference water. This parameter depends on the temperature of reference water.

Default: 7.8 mg/l

4.4.4.5 Calculate O_2 consumption in measurement phase 1

Here you se whether the O_2 consumption in measurement phase 1 should be calculated or not (chapter 4.4.2.10, page 30).

4.4.4.6 Calibration temperature

During each calibration, the temperature of the measurement cell is measured and recorded here.

Default: 25 °C

4.4.4.7 Take into account the pH value of the demineralised water

If the pH of the demineralised water is below 6.0 then “yes“ should be selected here.

Default: No

4.4.4.8 pH value of demineralised water

This value is important for the O_2 calibration, so it should be measured manually. The pH value depends on the temperature, but it should be neutral, thus as close as possible to 6.0.

Default: 6

4.4.4.9 Calibration oxygen sensor

Press this button to start the calibration process of the oxygen sensor.

4.4.4.10 Oxygen sensor plot

Here the signal can view during the O_2 calibration.

Meanwhile, the signal of the calibration can be seen in a new screen "O_2 sensor calibration plot" , for this push the button "oxygen sensor plot“. The oxygen consumption of the aerated non toxic reference water, is monitored and compared to this value (>0.4 mg/l). If the calibration is cancelled with the red “offline“ button then the previous calibration constant will be used. If no calibration is available then a default value is used. If the calibration was successfully then it will be marked green on the list indicating that it is now the active calibration. If the calibration failed, then it will appear in the list marked red and it will not become an active calibration. To view past O_2 calibrations double click a calibration from the list. A new screen "O2 sensor calibration - plot“ will open (Fig. 22:, page 36). On the right hand side the signal data is graphed, while the calibration parameters are displayed on the left:

- Measurement phase 1 and 2 with signal start and end, measurement temperature and O_2 consumption.
- O_2 saturation concentration
- Constant of proportionality
- Sample temperature
- Ref. O2 respiration
- ATU used?
- ATU consumption
- Biomass
- Measurement phase 1
- Measurement phase 2
- Aeration used?
- Averaging time
- Error
- Limits

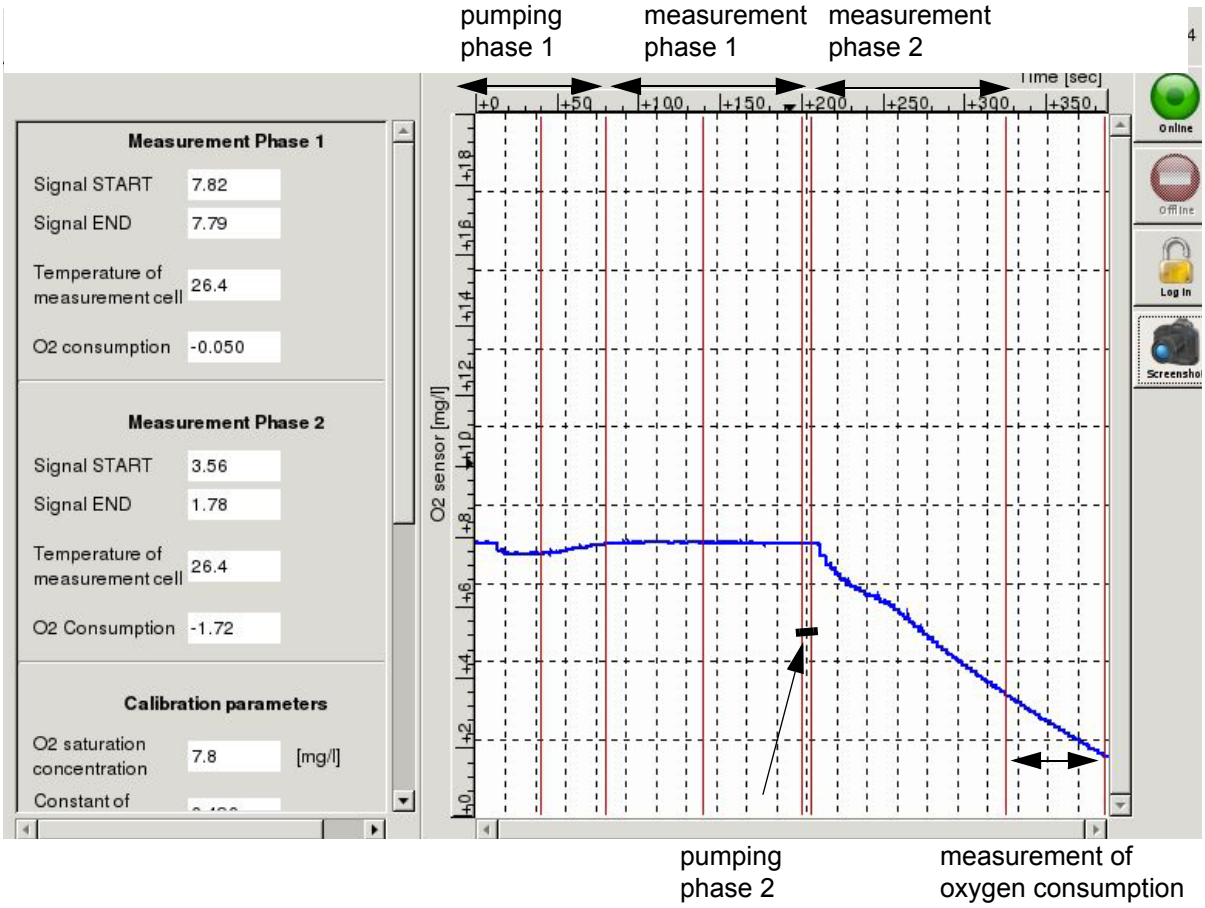

Fig. 22: O_2 sensor calibration - sensor plot (example)

4.4.5 pH calibration

The monitoring of the pH value in the fermentation vessel is essential for the operation of the NitriTox®. Due to the nitrification the pH value changes more and more into the acid area. For compensation of this effect, nutrient solution is added in suitable manner while the pH value is measured constantly with a pH sensor. The adjusted value is in general pH 7.6.

Note:
Before starting the NitriTox® the pH sensor has to be calibrated!

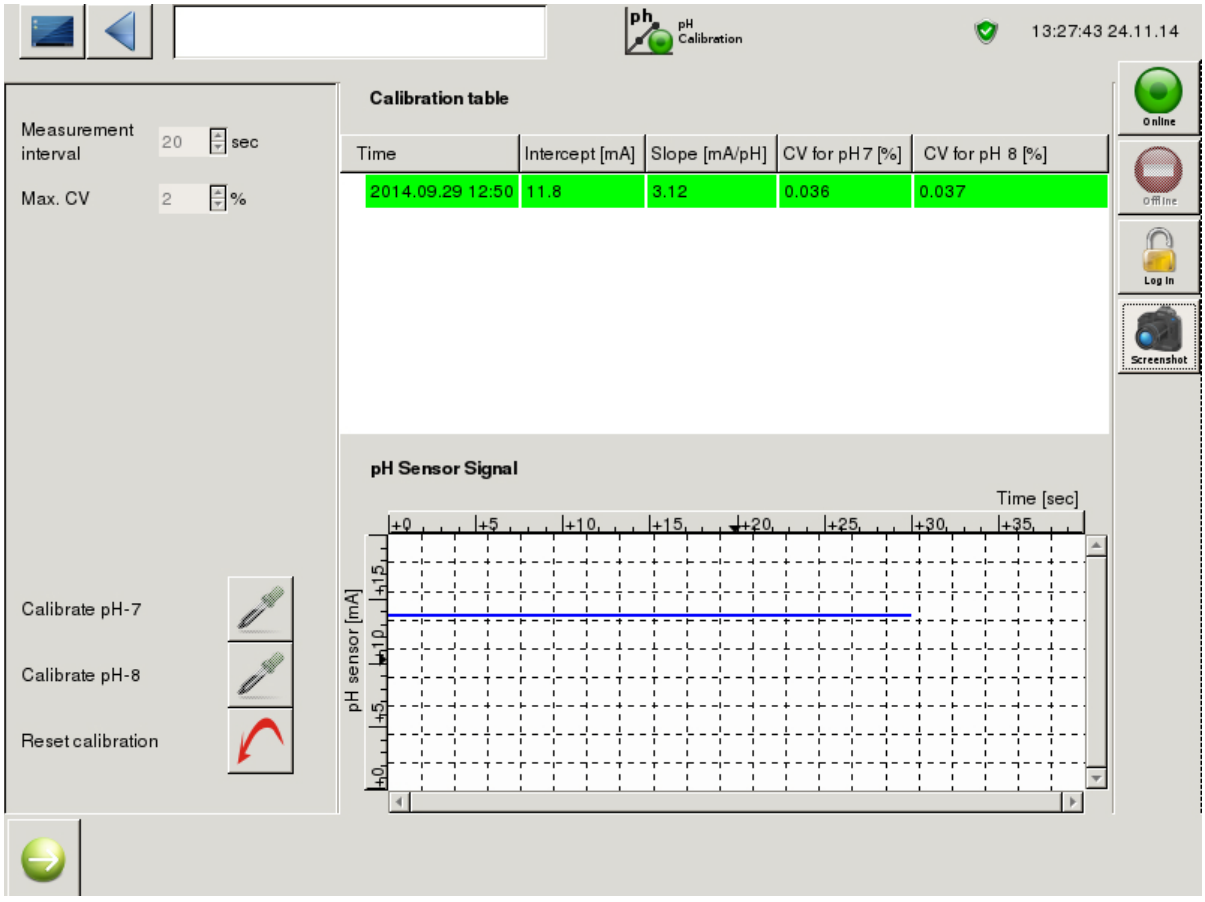

Fig. 23: pH calibration (example)

4.4.5.1 Carrying out the calibration

The following tools are required in order to carry out the calibration:

- buffer solution pH 7
- buffer solution pH 8
- washing bottle with demineralised water
- 2 beakers (glass or plastic with the capacity of at least 100 millilitres)

Calibration process:

1) Label Beakers with "pH 7" and "pH 8"
2) Fill about 50 millilitre of the buffer solution pH 7 into the beaker labelled "pH 7" and "pH 8" respectively with pH 8 solution.
3) Take the pH sensor from the fermentation vessel lid.
4) Clean the sensor carefully with demineralised water from the washing bottle.

5) Press the button "reset calibration", so that "calibrate pH 7“ is active.

Note:
When the analyser has been started up for the first time all 3 buttons (calibration pH 7, calibration pH 8 and reset calibration) are active!

6) Put the sensor in the buffer solution pH 7 for 60 seconds.
7) Press the button “calibrate pH 7“ as soon as the sensor signal is constant.

Note:
While the calibration is being carried out all three buttons are deactivated (shaded grey). After finishing the first calibration (pH-7) the buttons "calibrate pH-8“ and “reset calibration“ will become active again.

8) After completing the calibration for pH 7, the button "pH-8" is now active.
9) Clean the sensor thoroughly with demineralised water, then put in the pH 8 buffer solution beaker for 60 seconds. Press "calibrate pH 8" as soon as the signal is constant.
10) Once the calibration is completed, the results will appear in the table to the right, and the button "reset calibration" will become active again.

Note:
A successful calibration will be marked green in the table, while a unsuccessful one will be marked red. The calibrated value will only be used if it is green, red ones will be ignored. If they are not marked at all then they are old successful calibrations that have been replaced by newer ones.

11) Remove sensor from the breaker and rinse it with demineralised water.
12) Insert the sensor back into the fermentation vessel lid.

4.4.5.2 Measurement interval

The adjusted measurement duration used for the calibration is viewed here.

4.4.5.3 Max. CV

The adjusted max. CV [%], which shall be tolerated during a calibration is viewed here.

4.4.5.4 Calibration table

In this table all carried out calibrations are shown. The most current one is marked green. Red marking indicates that the calibration has failed and that the values shall be ignored.

4.4.5.5 pH sensor signal

This graph displays the digital value of the pH sensor, so that during a calibration it is possible to see if the measured value is constant.

4.4.5.6 Reset calibration

This button can be used to reset the calibration values. This must be done in order to be able to start a new calibration. This is only possible when the device is in offline mode.

4.4.6 Relay setting

The NitriTox® is equipped with four relays. The function of the relays can be individually assigned on this screen. The activities of the analyser are listed in table 5, page 82 ff.

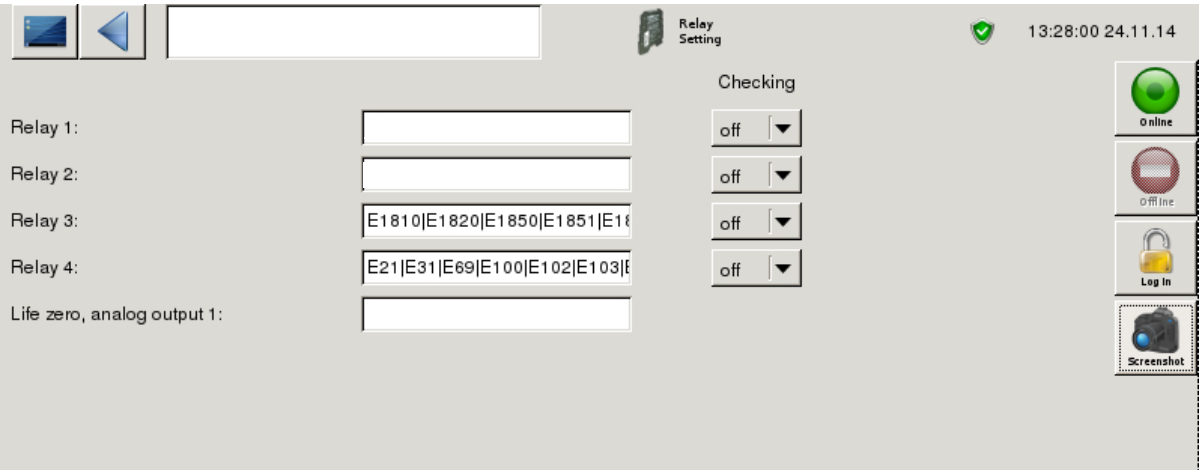

Fig. 24: Relay setting (example)

In order to put the required characters into the input field, use the number field keyboard (see Fig. 15:, page 23):

- Touch the input field.
- The keyboard appears at the bottom.
- If not: a keyboard button (see Fig. 15:, page 23) will appear in the bottom right-hand corner of the screen. Press this button and the keyboard will appear.
- Enter the suitable limits or errors with the programming tools.
- Save changes with the floppy disc button (chapter 4.5.7, page 59).

4.4.6.1 Tools for programming

- !-Operator:

The ! operator is used to invert a condition (!L1 means for instance that the condition is met if the limit set point #1 is NOT exceeded).

- &-Operator:

The & - operator is used as an “AND“ conjunction of several conditions.The programmed condition is only met when ALL individual conditions are met (E1835&E1810&E106 means for instance, that the analog output only drops to 0 mA when all three errors occur simultaneously).

- |-Operator:

The | - operator is used as an “OR“ conjunction of several conditions: the analog output drops to 0 mA when at least one condition is met (E1835|E1810|E106).

<u>Examples:</u>

- Malfunction alarm:

Program one of the 4 relays according to "E1810IE1844IE106" (without the quotation marks). If you want to use the relay as a break contact, the same function would be: "!(E1810IE1844IE106)". Please note the brackets!

- Sample-ready:

Program one of the 4 relays according to "M1" (without the quotation marks). This sequence means that the relay is closed after completion of the sample stream. This contact remains closed until the beginning of the next measurement.

4.4.6.2 Relay testing

There are two ways to check the relays:
- Check with a multi meter (only an authorized person should carry out this operation, because the rear housing must be opened) or
- check your programming of the relays at the plant control centre.

To check the relays with a multi meter:
1) Open the rear housing.
2) Connect the multi meter to the relay (see Fig. 54:, page 92). Please switch on the continuity test at the multi meter.
3) On the screen "relay setting", activate the check box of the relay where the multi meter is connected. (Example: the multi meter is connected on the relay number 2. Then on the screen “relay setting“: press the button for relay 2 “ON“!).
4) A tone will be heard (only if the multi meter can give a tone).
5) If no tone is heard, please check the multi meter. If the multi meter is incorrect, please contact the **LAR technical support (chapter 10.2, page 111)**.
6) After checking the relays, close the rear housing.

To check your programming together with the control centre:
1) If a relay is programmed, go to the control centre to check for error massages.
2) Activate the check box of the desired relay.
3) At the control centre, the error will appear.
4) If no error appears in the control centre, please contact the **LAR technical support (chapter 10.2, page 111)**.

4.4.7 PC settings

In this menu, there are four options to choose/do:
- Change the operator password
- Change the Date / Time
- Look up the “Software version“

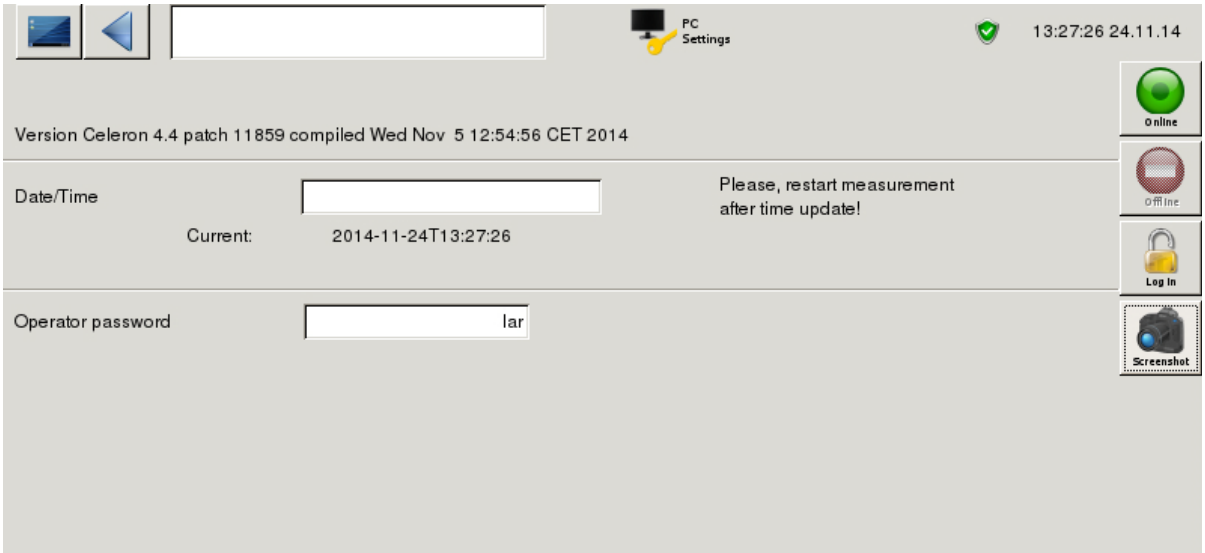

Fig. 25: PC settings (example)

4.4.7.1 Full software version

The version of the software is displayed in the top line of the “pc setting“ screen (Fig. 25:).

4.4.7.2 Date/Time

The date and time is visible on all screens and is positioned at the upper right hand corner. To set the clock to daylight saving time or for timing synchronisation with other operational analysers, please use the screen “PC - Setting“. Under the input field from the date / time is shown the correct entry. After setting the date and time, please first save changes and then restart a online measurement.

correct entry:	Year-Month-DayTHour:Minutes:Seconds
example:	2012-08-28T13:51:32

4.4.7.3 Operator password

Here the password for level II can be chosen. However, if the password is deactivated, a USB stick with level II will be necessary. The password, preset by LAR, is:

default password:	lar

The password can be changed by touching the input field:
- the keyboard appears (see Fig. 15:, page 23).
- type in the new password (making note of upper- and lower case letters) in the field.
- confirm this using the “floppy disc“ symbol (chapter 4.5.7, page 59).

4.4.8 Measurement value screen

The measurement screen shows the current measurement value and the time it was measured. The dosing rate of the nutrient solution is also shown on this screen.

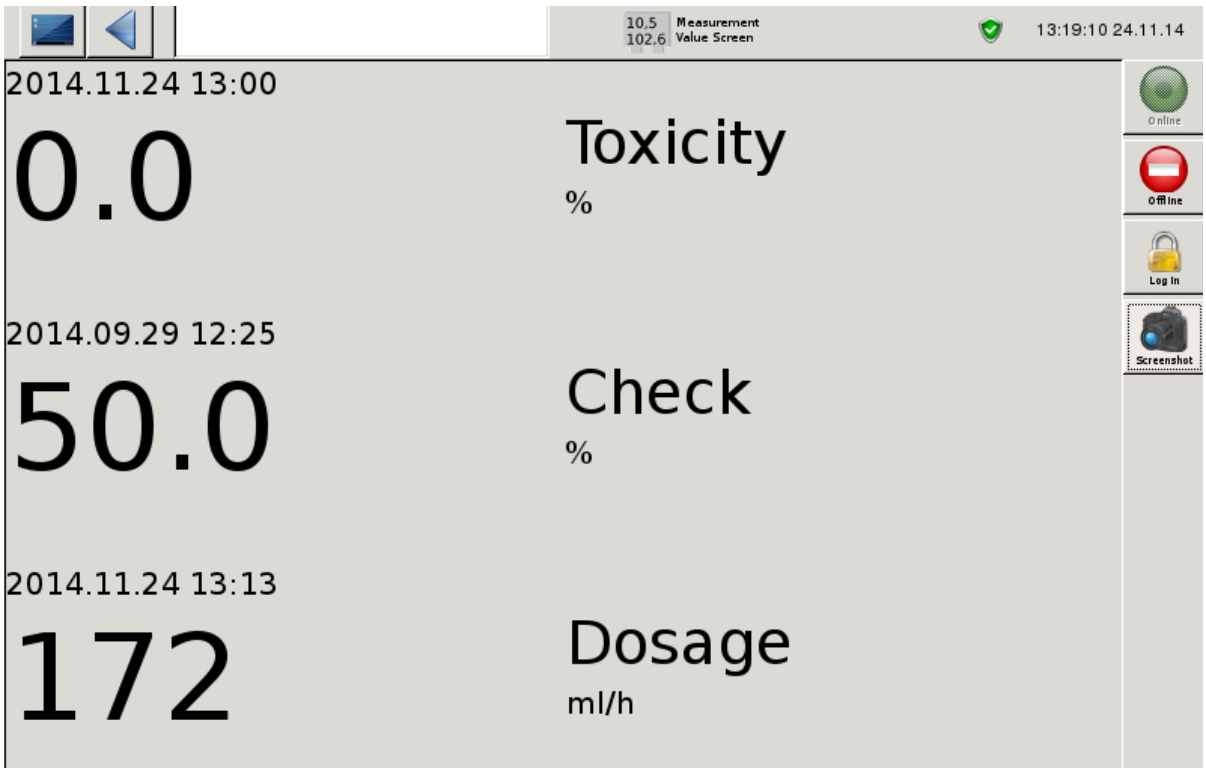

Fig. 26: Measurement value screen (example)

Note:
The modules „measurement value screen“ and „24 h- Profile“ that are shown in menu level I are only available when a measurement is carried out. When the measurement is stopped, these modules are greyed out and the module „introductory screen“ will be activated.

4.4.9 24 h - profile

Two diagrams can be chosen in the 24h-profile: the toxicity diagram and dosage diagram of the last 24 hours. The dosage diagram shows the dosing rate of the nutrient solution which is pumped into the fermenter.

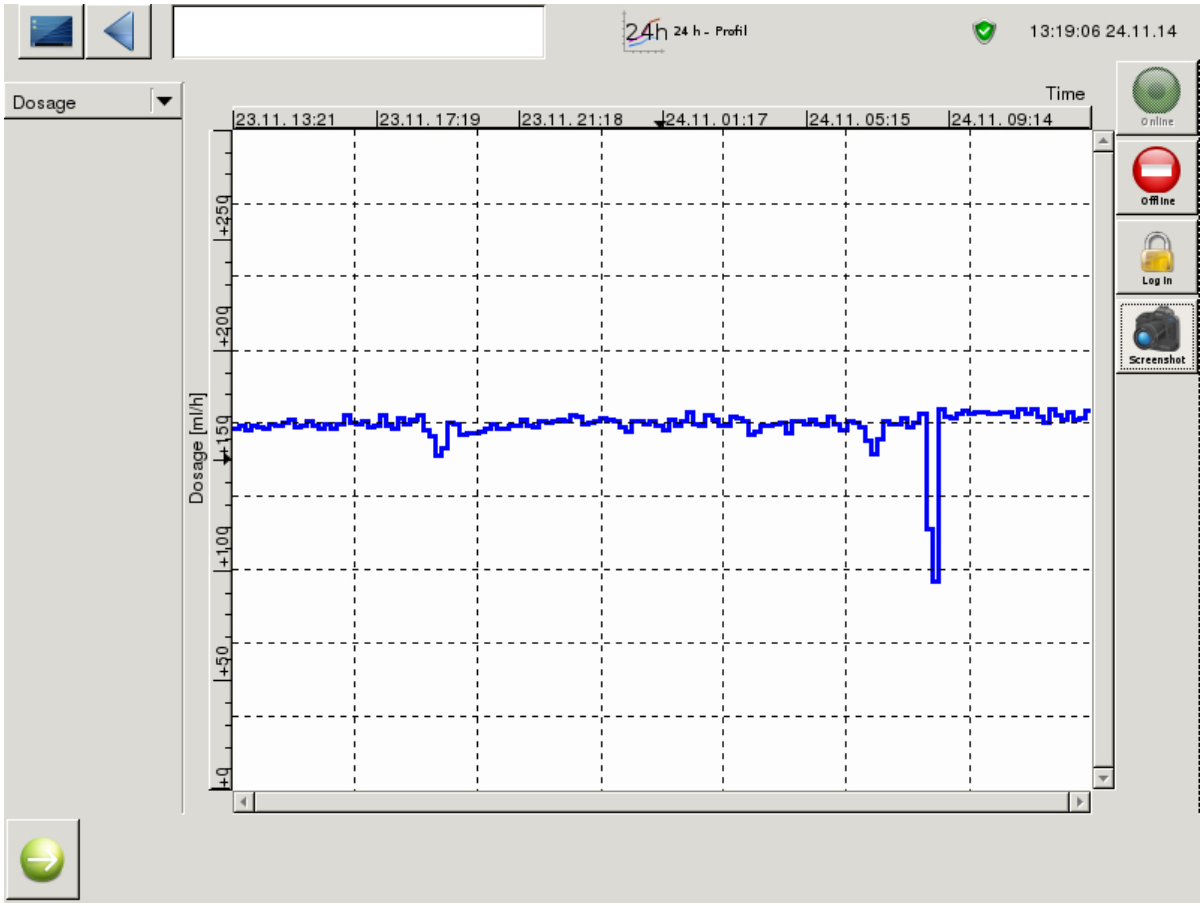

Fig. 27: 24 h - profile - dosing (example dosage)

Note:
The modules „measurement value screen“ and „24 h- Profile“ that are shown in menu level I are only available when a measurement is carried out. When the measurement is stopped, these modules are greyed out and the module „introductory screen“ will be activated.

4.4.10 Signal curve

To view the measurement curve of the actual measured value, go to the screen “signal curve“. On the left side additional level dependent data is given. For level II users the recent O_2 concentration [mg/l] for the actual measurement is visible.

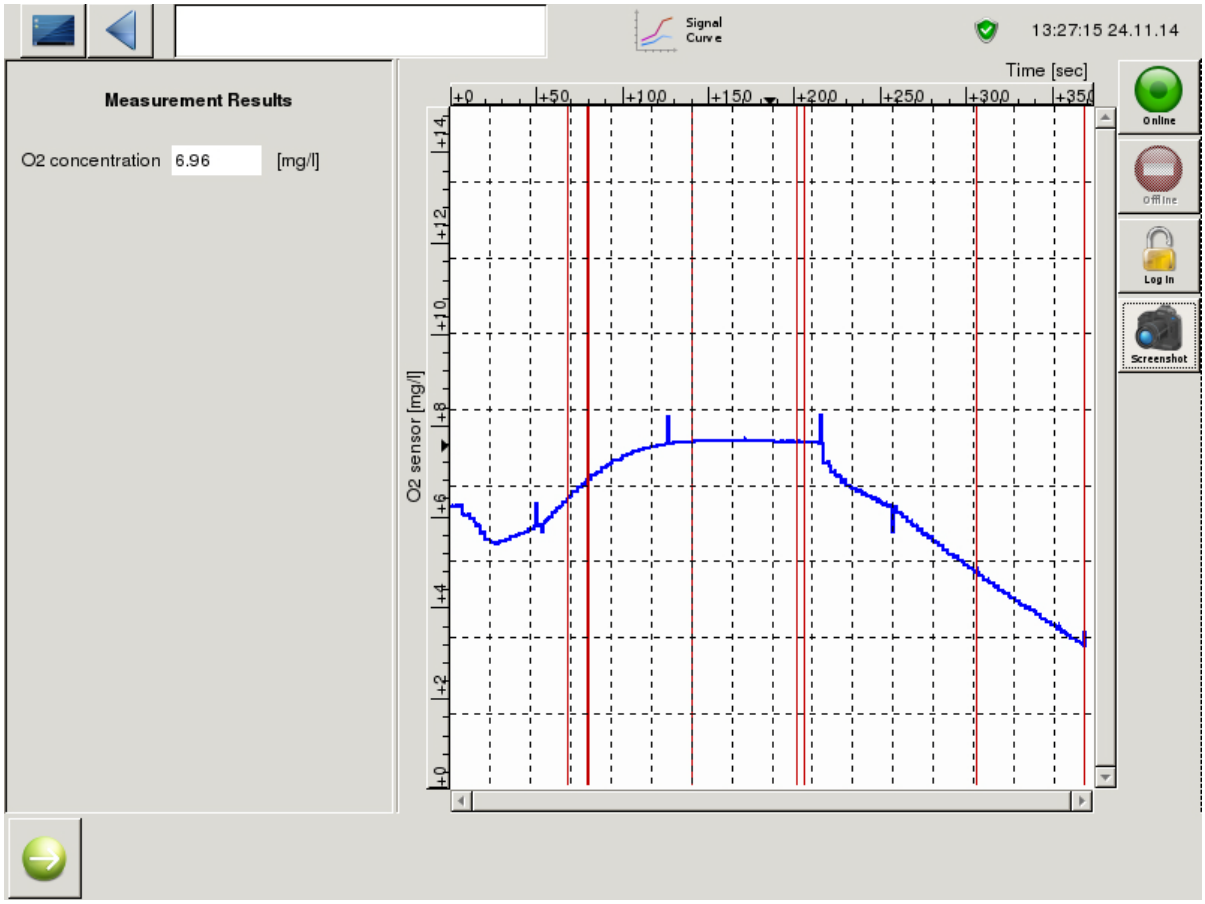

Fig. 28: Signal curve (example)

4.4.11 Status screen

In this split screen (Fig. 8:, page 18), the right window gives an overview about the active status values of the analyser. The left window shows the measured values for each parameter (toxicity and dosage). If another parameter is required press the selection field “please choose“. The first column shows the time [yyyy:dd:mm hh:min] of the measurement. The other columns show the respective measured values.
In this split screen, the right window shows an overview of the current parameters.

Note:
In order to view the details of toxicity or dosage measurement values (such as the signal curve) double click a value. A new window "O_2 sensor details - plot" (Fig. 34:, page 51) with the measurement value, the date, any corresponding error notifications or limits and a graph of the signal will be opened. Only the last 200 curves are saved, thus it is possible that older signal curves can not be drawn up.

In the upper right window the following status parameters of the analyser are displayed:

- pH fermenter - pH value in fermenter
- Dosage [ml/h] - nutrient dosing rate
- Temperature of:

1) Measurement cell
2) Fermenter
3) Ambient

- Scheduled time for:

1) Next measurement
2) Next auto calibration
3) Next growth powder dosage

- Errors
- Limits
- Control state

Note:
- When the device is offline then "offine" is simply displayed at the position "next measurement".
- Next auto calibration can be only possible when the device is online.

4.4.12 Limit settings

4 limits can be adjusted. To set one limit, the following settings have to be done:

- choose: the parameter (toxicity or dosage)
- enter: the minimum value of the measurement value (lower limit)
- enter: the maximum value of the measurement value (upper limit)
- enter: the name of the limit

These first three categories are important. The last one, “name“, is only for documentation.
Select the parameter by pressing the button in question. To adjust the value for minimum, maximum or name, touch the white input field below the “minimum, maximum or name“ and enter a value.

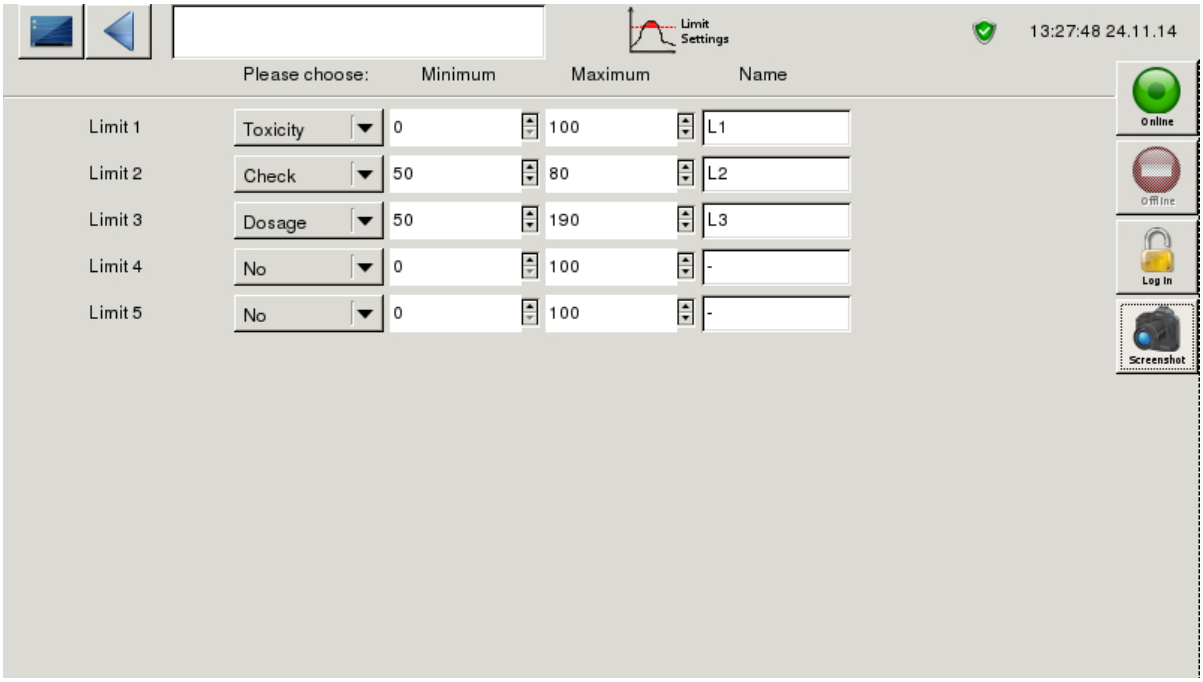

Fig. 29: Limit settings (example)

4.4.13 Data base

Sensor data (measurement cell temperature, fermenter temperature and temperature of ambient) as well as channel data (toxicity and dosage), which have been saved, can be opened in the data base. First choose sensor or channel data (Fig. 30:). Before data can be opened a time frame must be selected. After pressing "time interval" two calender pages will appear (Fig. 31:, page 48). First the start date must be selected on the left calender page. Additionally a specific time can also be selected to further filter results shown. This can be done by moving the horizontal scroll bar to the right. Only when finished the end can be date be chosen (following the same steps). Press the button "set" located in the bottom right of the screen when finished. This will reopen to the main data base menu. Now it is possible to view the measurement data in two different forms:

- table form for measurement data (no. 2 in Fig. 30:)
- curve form for measurement data (no. 3 in Fig. 30:)

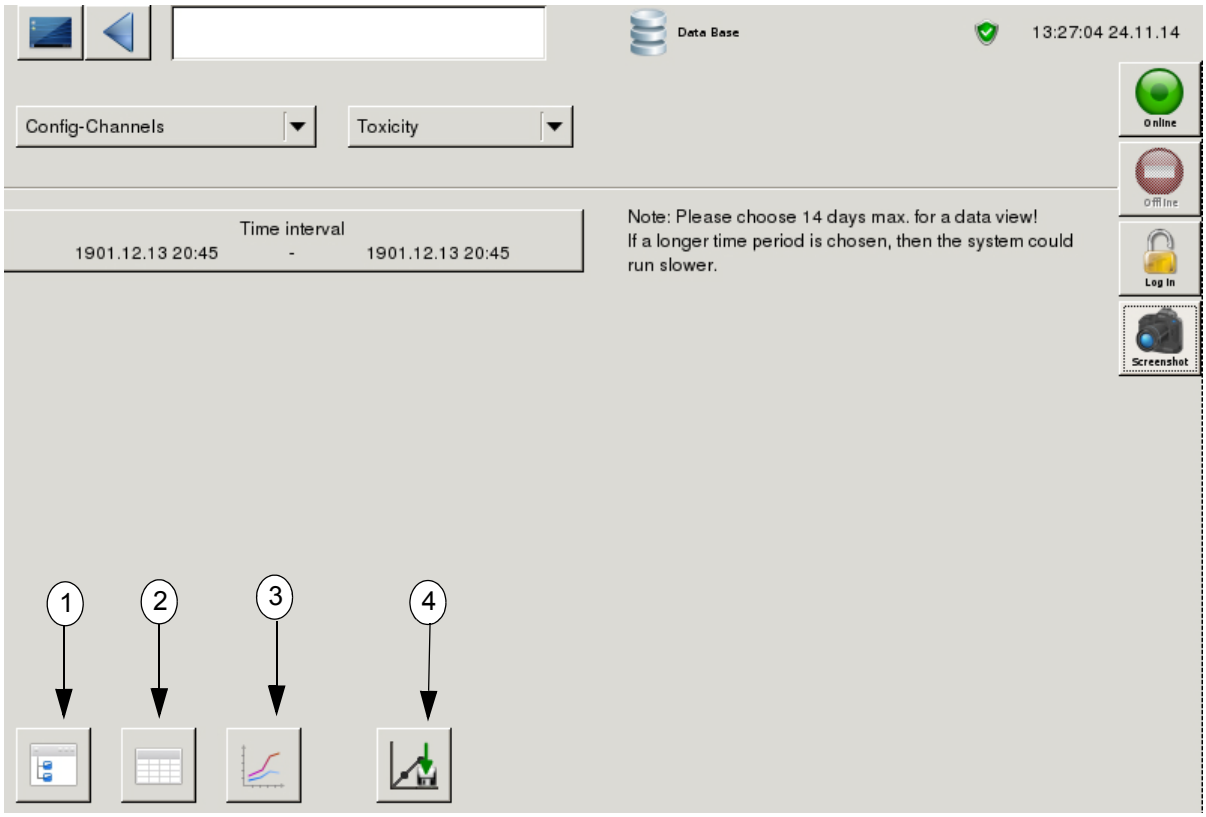

Fig. 30: Data base (example)

Note:
Although there is no maximum time limit, if too much data are selected the system could slow down. Thus only select a maximum of 14 days at a time.

4.4.13.1 Saving data

Measurement data (only channel data) can be saved to an USB stick:
1) Connect the USB stick to the analyser (Fig. 2:, page 5).
2) Choose the desired channel data.The time interval must be set/ taken into account.
3) Press the “save“ button (number 4 in Fig. 55:) and the data will be copied to the USB stick.

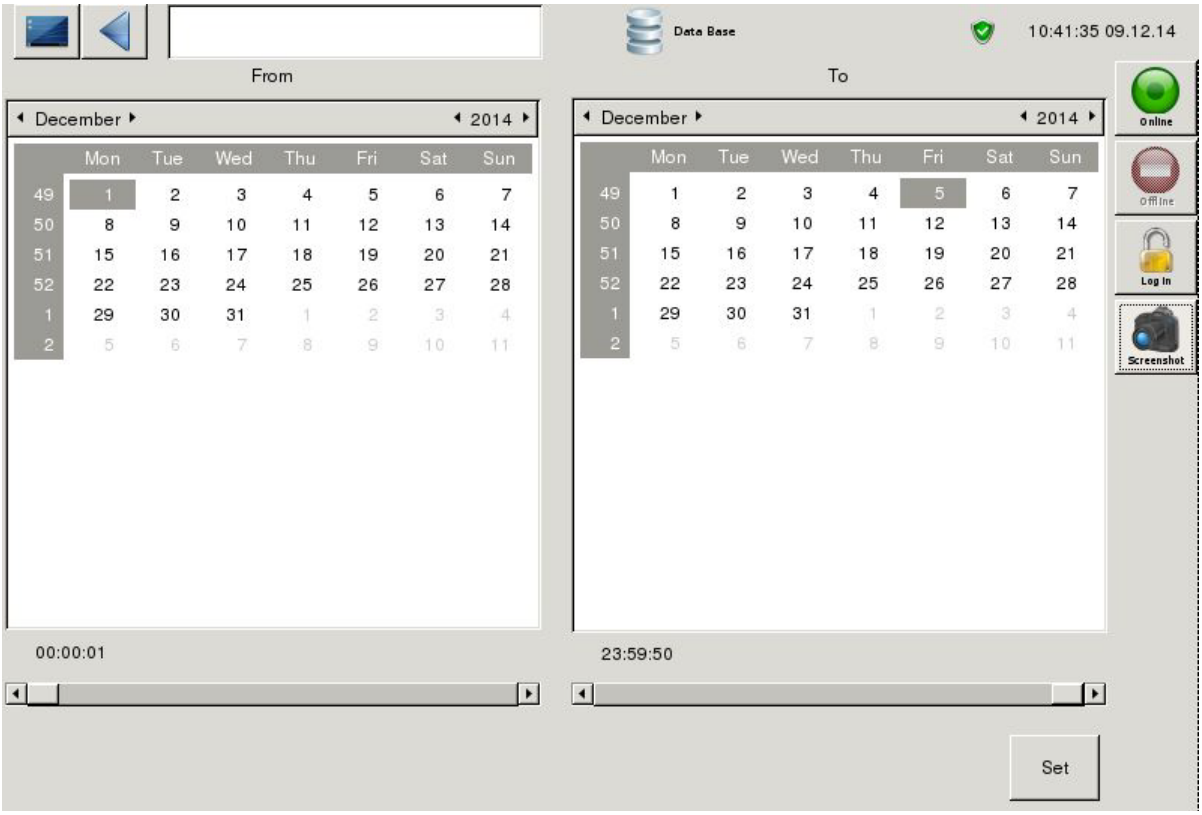

Fig. 31: Data base - calender (example)

4.4.13.2 Measurement data as a table

The measurement data are shown next to the time column (Fig. 32:). If you press the icon “measurement data as a curve“ (no. 3 in Fig. 30:), the associated measurement curve appears.

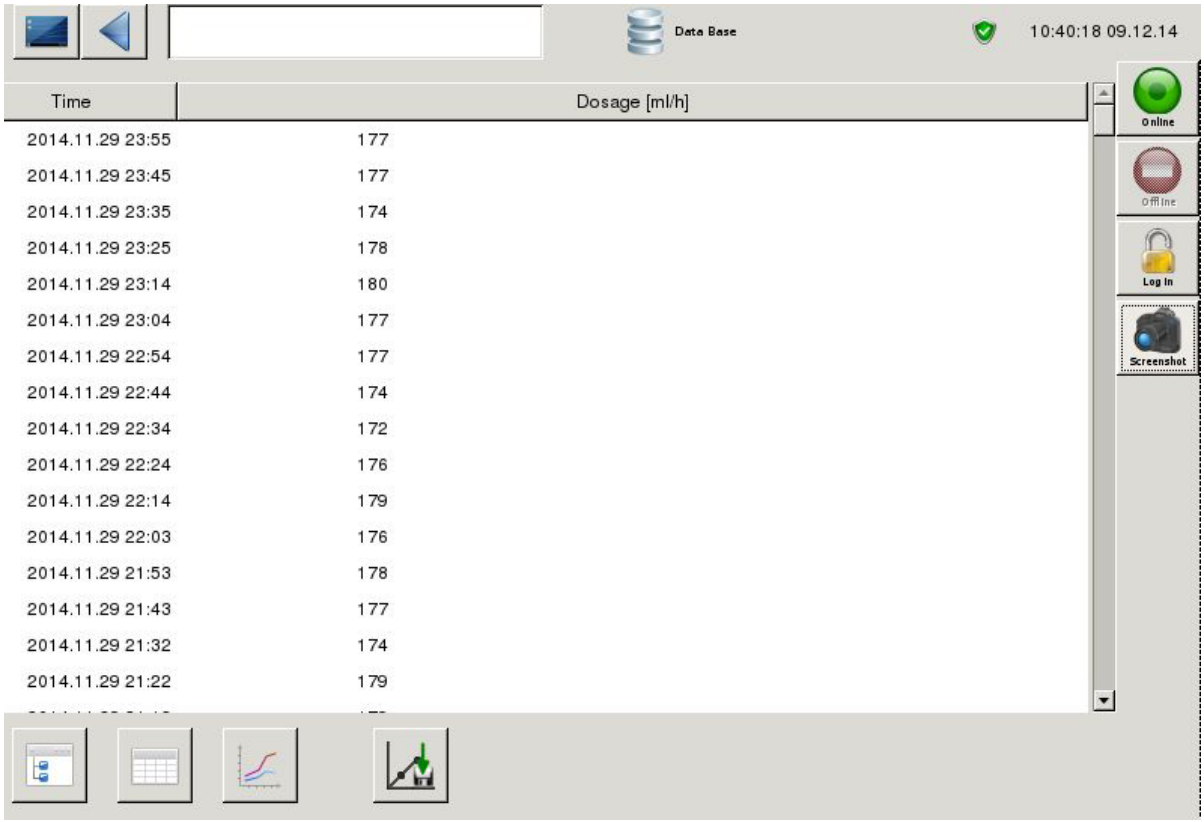

Time	Dosage [ml/h]
2014.11.29 23:55	177
2014.11.29 23:45	177
2014.11.29 23:35	174
2014.11.29 23:25	178
2014.11.29 23:14	180
2014.11.29 23:04	177
2014.11.29 22:54	177
2014.11.29 22:44	174
2014.11.29 22:34	172
2014.11.29 22:24	176
2014.11.29 22:14	179
2014.11.29 22:03	176
2014.11.29 21:53	178
2014.11.29 21:43	177
2014.11.29 21:32	174
2014.11.29 21:22	179

Fig. 32: Data base - measurement data as a table (example toxicity)

Note:
In order to view the details of toxicity or dosage measurement values (such as the signal curve) double click a value. A new window "O_2 sensor details - plot" (Fig. 34:, page 51) with the measurement value, the date, any corresponding error notifications or limits and a graph of the signal will be opened. Only the last 200 curves are saved, thus it is possible that older signal curves can not be drawn up.

4.4.13.3 Measurement data as a curve

If the chosen measurement data on the screen “main represention of the data“ (no. 1 in Fig. 30:, page 47) should be shown as a curve, then the “measurement data as curve“ button has to be activated (no. 3 in Fig. 30:, page 47).
On the screen “measurement data as a table“, you can also get to the curve view. Therefore, press the button “measurement data as curve“ and the appropriate measurement curve appears.

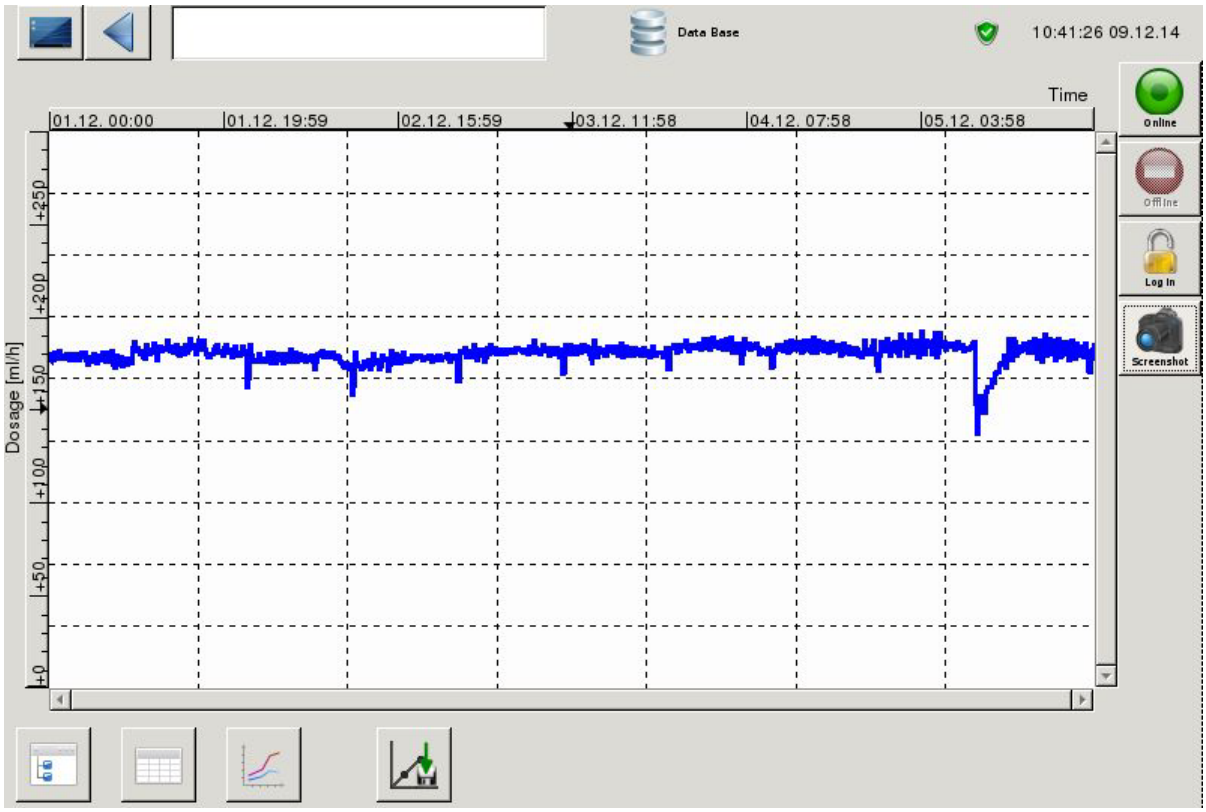

Fig. 33: Data base - measurement data as a curve (example ambient temperature)

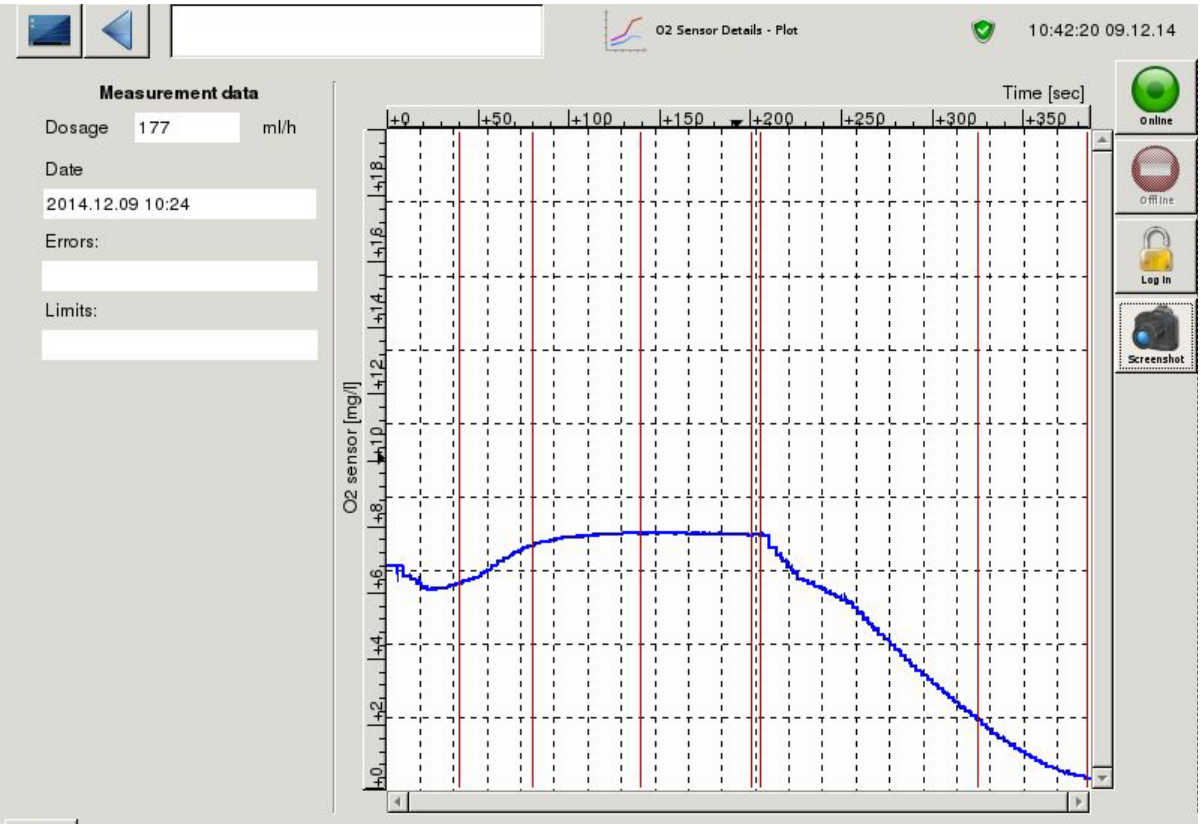

Fig. 34: Data base - O2 sensor details - plot (example toxicity)

4.4.14 Log-book

When logged in as user with level II rights, the log-book can be accessed via the status bar (Fig. 35:). Use the symbol “go to the log-book“ (no. 2 in Fig. 35:) and a selection window will pop up. In this window, touch the “control state“ (Fig. 41:, page 59). There are two screens in the log-book:

- Archiving of the log-book (no. 4 in Fig. 35:)
- Current errors (no. 3 in Fig. 35:)

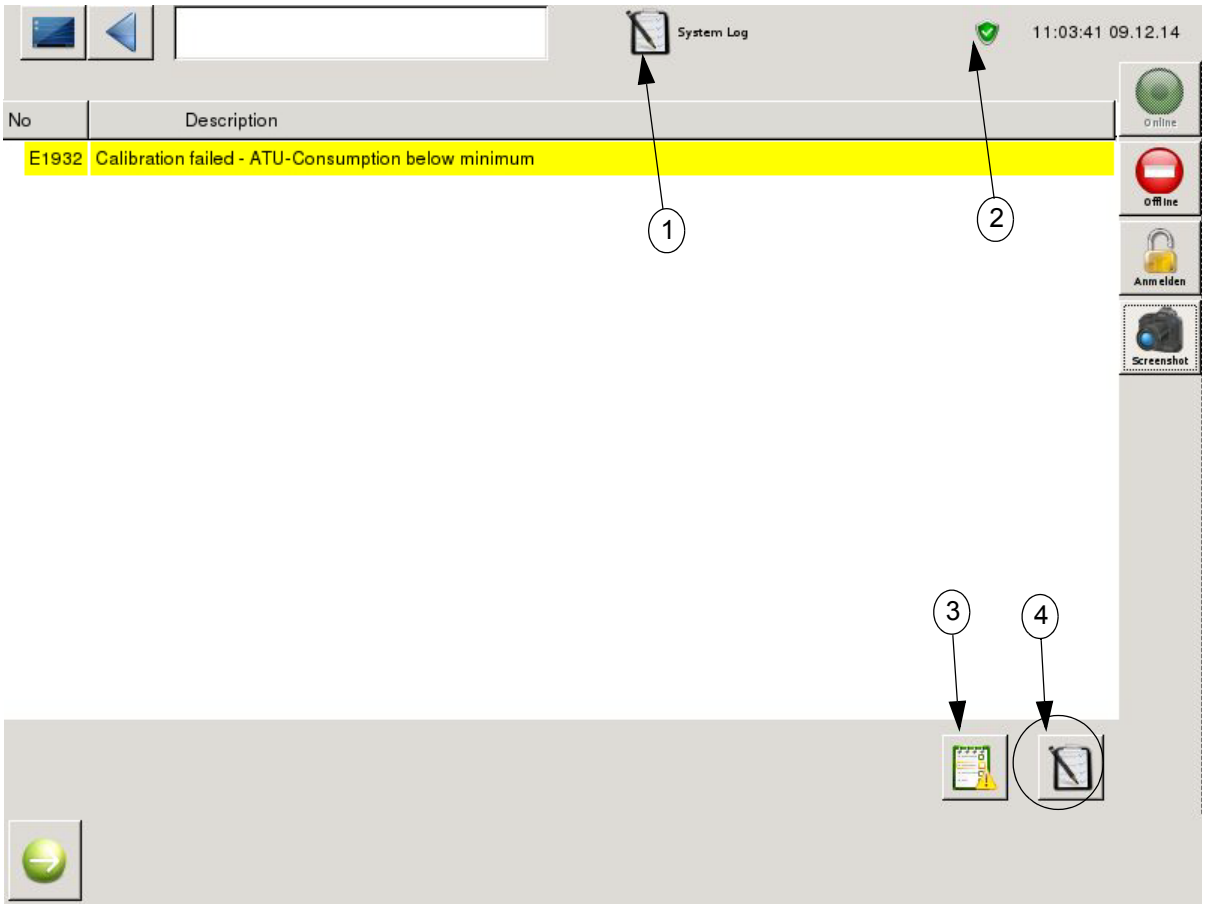

Legend:

1) Screen of the log-book (archived and current errors)
2) Go to the log-book (symbol)
3) Current existing errors screen
4) Archiving the log-book (errors, system, limit)

Fig. 35: Log-book (example)

The symbol of the log-book insight consists of three colours:

- Green: no error occurred. All boundary conditions are complied. The measurements are fine.
- Yellow: errors occurred that can affect the measurement. The measurement is not reliable.
- Red: errors occurred and the measurement has been cancelled. Please check the analyser.

For a more detailed view of the current existing mistakes, look in the log-book and check current existing error.
On the screen of the log-book archive, there are four parameters to see:

- All
- System
- Erros
- Limits

Note:
Log-book screens can only as be accessed under level II.

Choose the requested parameter and the time interval. After pressing "time interval" two calender pages will appear (Fig. 31:, page 48). First the start date must be selected on the left calender page. Additionally a specific time can also be selected to further filter results shown. This can be done by moving the horizontal scroll bar to the right. Only when finished the end date can be chosen (following the same steps). Press the button "set" located in the bottom right of the screen when finished. The requested parameter (example: errors) will show here for the selected time.

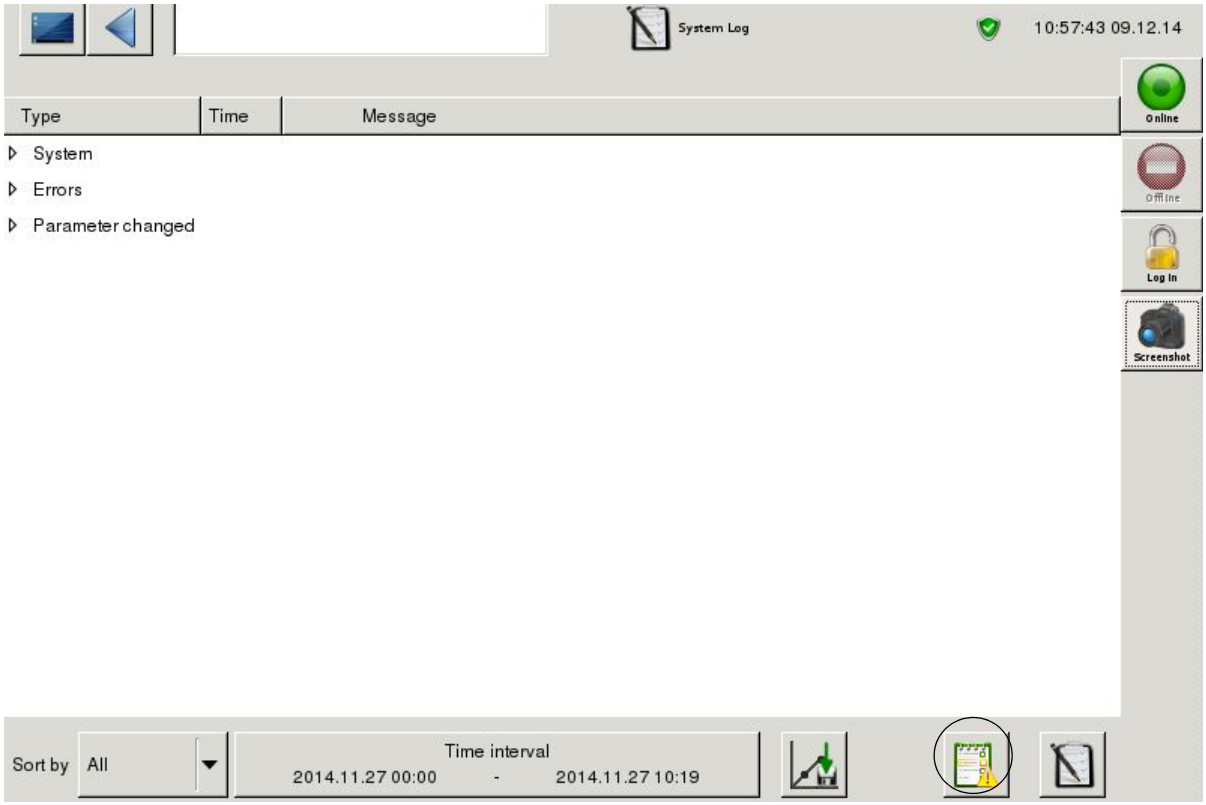

Fig. 36: Log-book (example)

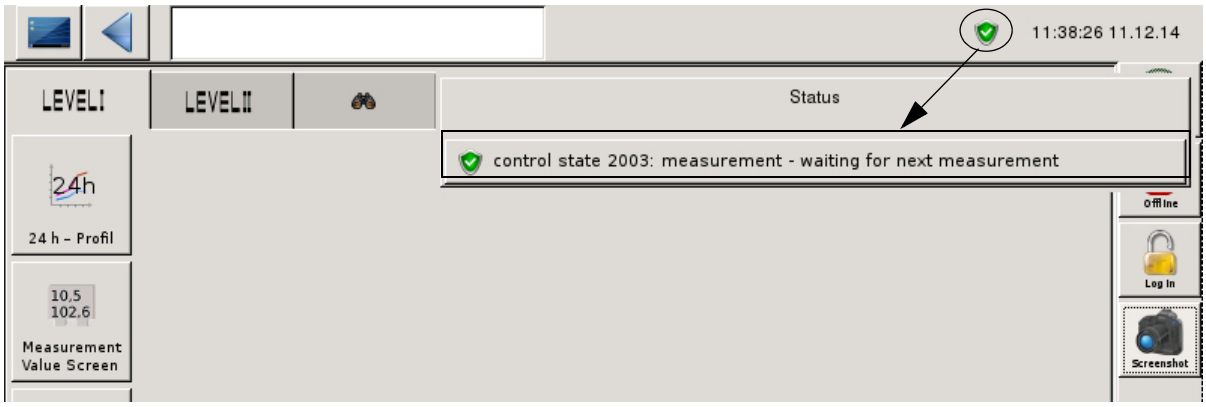

Fig. 37: Go to the log-book (example)

4.4.14.1 Saving log-book data

Log-book data can be saved to an USB stick:
1) Connect the USB stick to the analyser (Fig. 2:, page 5).
2) Choose the desired data.The time interval must be set/ taken into account (chapter 4.4.13, page 47 ff.).
3) Press the “save“ button (chapter 4.5.7, page 59) and the data will be copied to the USB stick.

Note:
The choose data are.csv-file, which can be imported via calculation programs such as libre office calc or Microsoft Excel.

4.4.15 Data storage

After finalising the start-up procedures and during maintenance and services of the analyser are stored. A backup of the parameters obtained during the installation process is stored for safety reasons and archived in the LAR - Database.
If needed, please get in touch with **LAR technical support to get the stored data (chapter 10.2, page 111).**

4.4.16 Analog out calibration

In this menu, the operator can decide, whether he wants to use a 0 - 20 mA or 4 - 20mA signal for his analog outputs. If 4-20mA is chosen, the “life-zero“ melanism is used. This means that in case of an error, 0 mA can exported out on the electrical output (analog output). This “life zero“-mechanism can be activated by the user in the selection box. To do this, select “life zero“ in the “life zero“ selection box.

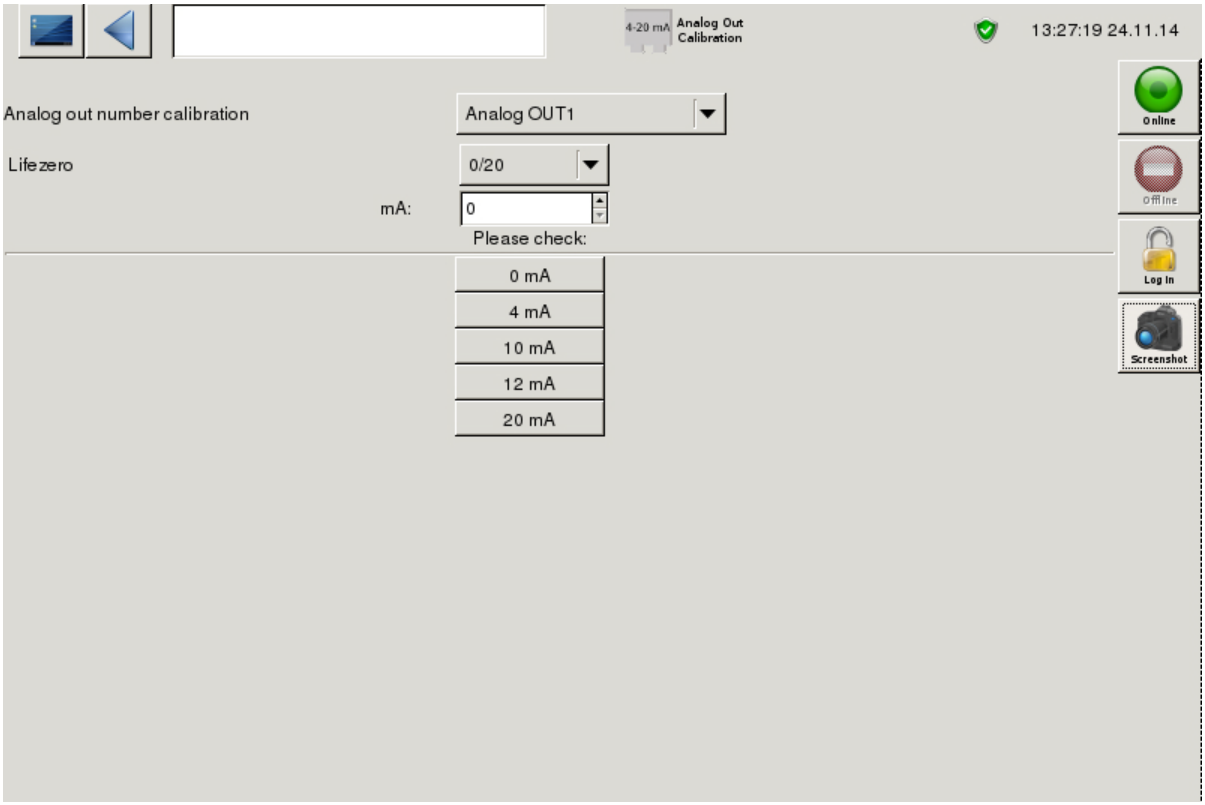

Fig. 38: Analog out calibration (example)

Only an authorized person should carry out this operation, as the rear housing has to be opened.

1) Open the rear housing.
2) Connect the current meter (ammeter) to the analog output (see Fig. 54:, page 92).
3) On the screen “analog out calibration“, type in the “analog out number“ where the current meter is connected.
4) Select the desired mA value (0, 4, 10, 12 or 20mA).
5) The mA value must be visible on the current meter. If a different mA value is seen, please contact **LAR technical support (chapter 10.2, page 111).**
6) After checking the analog output, close the rear housing.

Note:
Please disconnect any signals to the control system before starting the test.

4.5 Important tasks, good to know

4.5.1 Password

The password can be changed by the user on level II on the screen “pc settings“ (chapter 4.4.7, page 41 ff.). If a new password is set it should be documented and stored in a safe place.
If someone changes the default password or deactivates the password, a USB stick with level II access is necessary to enter level II menu. A USB stick is part of the additional spare parts box, which is set together with the analyser.

Note:
- The default password set by LAR is: lar
- A USB stick with level II is required if the password is deactivated.

4.5.2 Software version

The introductory screen (Fig. 11:, page 20) in level I as well as the pc settings screen (Fig. 25:, page 41) in level II show the current version of the analyser software.

4.5.3 Terminating RUN mode (stop)

The measurements will continue until they are stopped by using the red “offline” button (upper right hand corner). The analyser will then switch into standby mode and all data that is not saved yet will be saved. When the measurement is stopped, the maintenance and service tasks (chapter 5, page 63 ff.) can be carried out, the operating parameter settings (e.g. measurement frequency) can be modified or previous measurement values can be evaluated.
If the measurement is terminated by a power failure, an auto start is carried out after reestablishing the power. The analyser automatically switches back into the RUN mode (if the run mode was active before the power failure) and continues its operation, when all operating parameters are ready.

4.5.4 Date and time

The date and time is visible on all screens and is positioned in the upper right hand corner. To set the clock to daylight saving time or for synchronisation with other operational analysers, go to the screen “pc settings“ (see chapter 4.4.7, page 41 ff.).

4.5.5 Language

The software language of the analyser is set by LAR technical support. To change the language, please contact **LAR technical support (chapter 10.2, page 111)** or an authorized distributor.

4.5.6 To zoom in diagrams

Some screens (e.g. signal curve) have diagrams. The curve can be seen closer (zoomed). For that, create a box in the screen (Fig. 39:) with the finger or a touch pen. Now click inside of the box and the cutting box will be seen over the whole screen (Fig. 40:). It is possible to zoom several times. To see the curve in the original size again please double click any where on the screen.

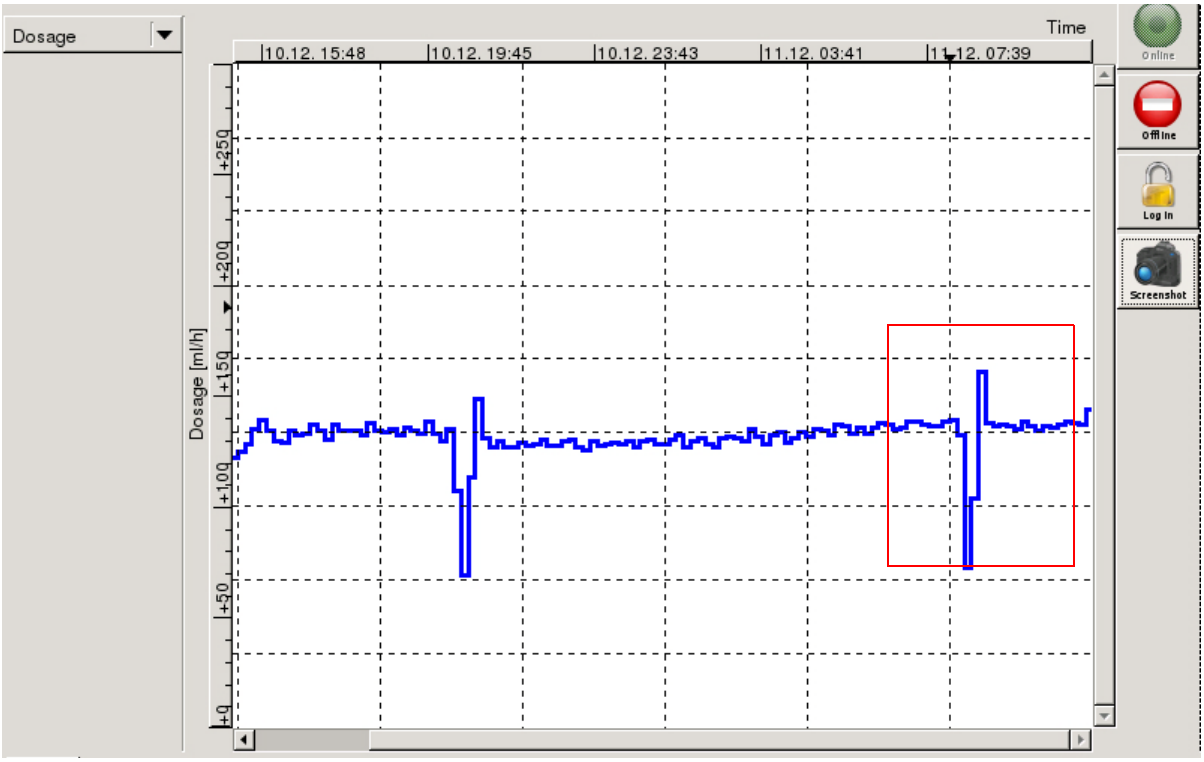

Fig. 39: Zoom operation- part1 (example)

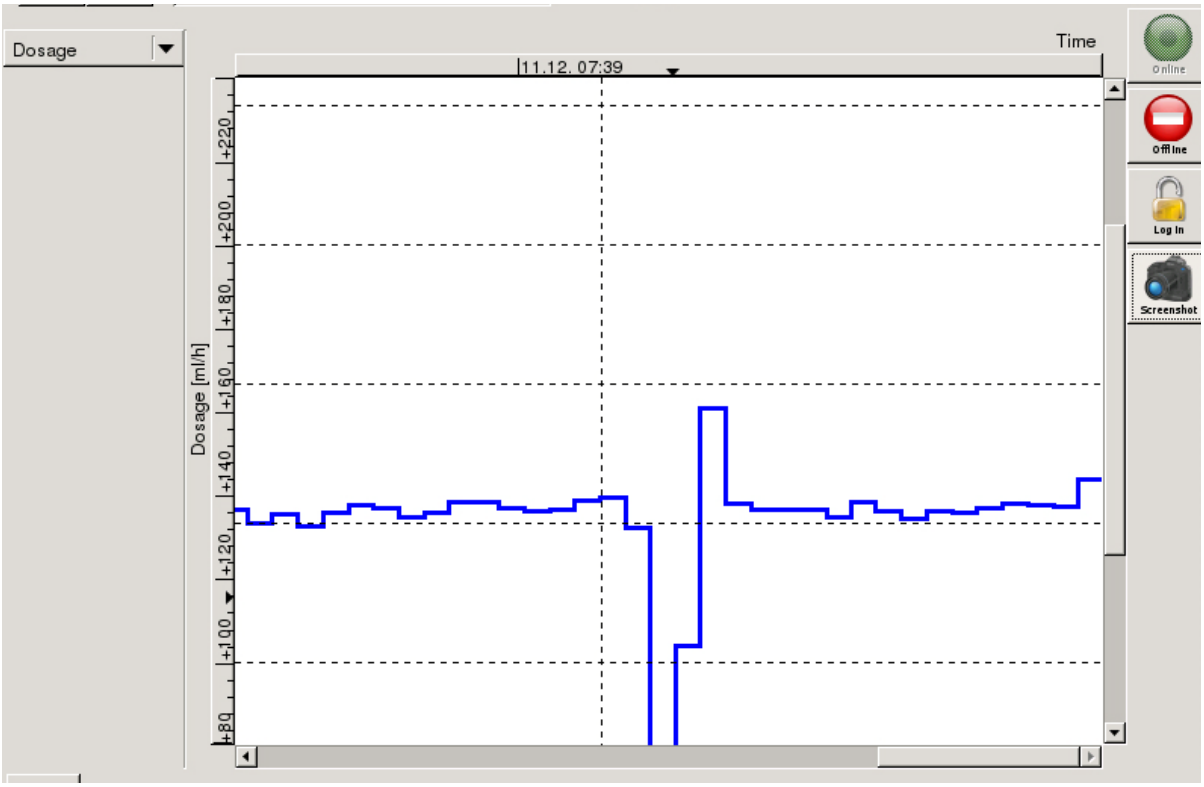

Fig. 40: Zoom operation- part2 (example)

4.5.7 Save

Some changes of settings need to be saved. To carry out a saving process:

- enter necessary changes (for example parameters).
- verify the new entry by pressing “enter“.
- a “floppy disk“ symbol appears in the status line (right upper position, next to date/time) (see Fig. 41:).
- press the “floppy disk“ button and a new smaller selection window comes up.
- select “save changed parameter“ (see Fig. 41:).
- a new window comes up in the middle of the screen (see Fig. 42:).
- if the change should be saved, press the green “hook“ on the new window.
- if the change was incorrect press, the red “x“ on the new window to cancel the operation.

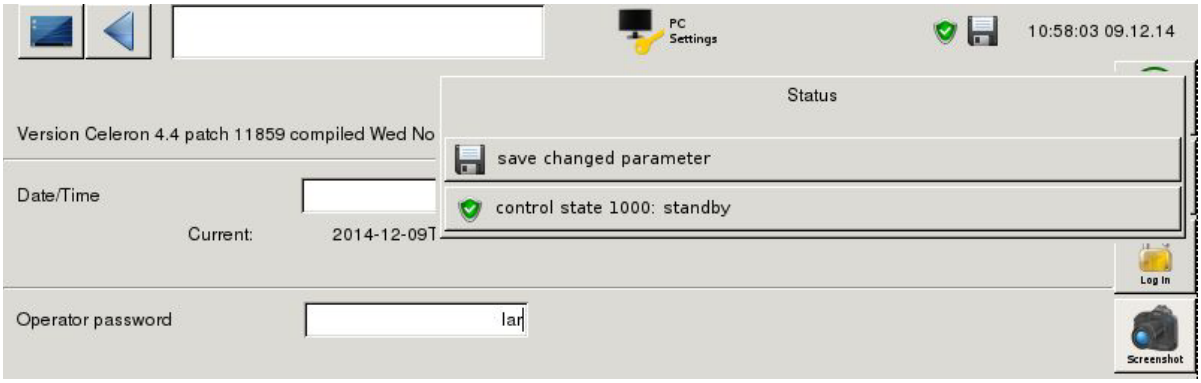

Fig. 41: Saving operation- part1 (example)

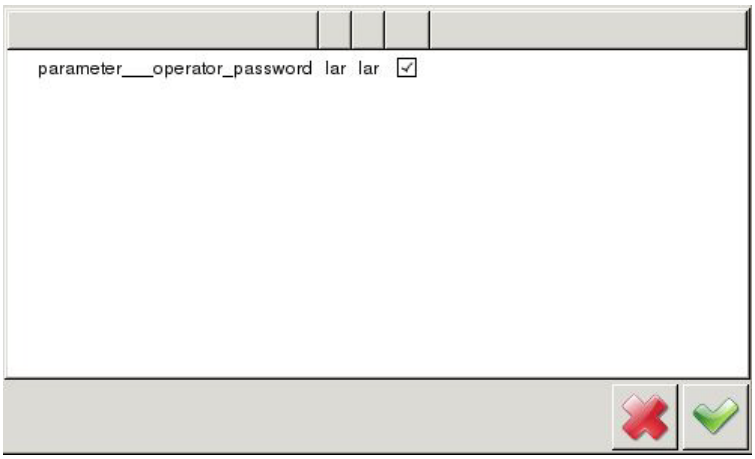

Fig. 42: Saving operation- part2 (example)

Note:

- In the window (Fig. 42:) two values are displayed. The first value is the prior value and the second value is the new value.
- If more than one parameter is changed, only one saving process must be undertaken.
- The “check mark“ next to the new value means the parameter will be changed. That means if 5 parameters are changed and the saving process starts with the "floppy-disc", the window appears with the changed parameter. If the first parameter is wrong, deactivate this parameter with the “hook“ next to the parameter. Then the saving process can be finished with the green “hook“. The first parameter won‘t change but the other four are changed.

4.6 The status identification

The current status of operations is reported in the status screen (Fig. 8:, page 18).
This screen will only display the latest status reports, current errors and limit messages. For a status report per day (24 h - profile) please enter the “log-book“(chapter 4.4.14, page 52 ff.).

For questions or unsolved issues, please feel free to contact an authorised person of LAR or **LAR technical support (chapter 10.2, page 111)**:

Table 3: Status identification (control state)

Status	Description	Possible Cause	Action
Activity			
M1	Measurement		
C1	Calibration		
P	Offline mode		
W	Waiting time, analyser is in measurement mode and in measurement interval		
M1&W	Waiting time before measurement and after measurement		
Limits			
L1	Limit for toxicity or dosing		
L2	Limit for toxicity or dosing		
L3	Limit for toxicity or dosing		
L4	Limit for toxicity or dosing		
Instrument error			
E 1810	Exceeded of toxicity of the measured reference water	Reference water can be contaminated	Check reference water
E 1820	Toxicity fallen short of the toxicity sample	ATU solution can be contaminated	Check ATU solution
E 1850	Temperature sensor in the Fermenter out of range	Temperature sensor can be broken	Check temperature sensor and temperature in fermenter
E 1851	Ambient temperature sensor out of range	Temperature sensor can be broken	Check temperature sensor and ambient temperature
E 1852	Temperature sensor in the measurement cell out of range	Temperature sensor can be broken	Check temperature sensor and temperature in measurement cell
E1860	Temperature sensor stirrer level	Sensor broken	Check temperature sensor
E1890	pH sensor - cable broken	Cable broken	Check pH sensor and cable
E1891	pH sensor - calibration fault	Slope too low	New calibration
E1930	Calibration fault	Measurement phase 2: consumption out of range	Check reference water (present and aeration), reached water in the measurement cell? Bubbles on the oxygen sensor?

Table 3: Status identification (control state)

Status	Description	Possible Cause	Action
E1931	Calibration fault	Measurement phase 1: oxygen is too much or too little present	Check reference water (present and aeration), reached water in the measurement cell? Bubbles on the oxygen sensor?
E1932	Calibration fault	ATU calibration fault	Make a new ATU solution, check ATU tube
E1933	Exceeded minimum oxygen concentration	Oxygen concentration in measurement phase 1 < 4.0g/l	Check aeration of the sample and oxygen concentration in measurement 1
E1934	Exceeded O_2 concentration	O_2 concentration in measurement phase 1 >10mg/l	Check reference water
E1935	Three times automatic calibration failed	Reference water is empty. Sample way from Fermenter to measurement cell is blocked.	Check reference water. Check way from Fermenter to measurement cell. Carry out a manual calibration.
E1980	Air flow fallen short of	Aeration stone contaminate or compressor/choke broken	Clean aeration stone and check compressor
E1981	Exceeded air flow	Tubes between air flow sensor and aeration stone interrupted	Check aeration
E1990	Air flow fallen short of	Nozzles (holes in the fermenter ground) blocked or compressor/choke broken	Check aeration
E1991	Exceeded air flow	Tubes between air flow sensor and check valve to the choke interrupted	Check aeration

5 Control, Maintenance and Service

The analyser has low operational costs. The maintenance and service only needs to be carried out periodically. It is recommended that all maintenance and service work is documented in order to accurately perform future maintenance and service on the analyser. This is also a valuable resource for finding errors, in the case of technical failures (chapter 12, page 117).
The following lists (table 4, page 64 ff.) contain the scheduled maintenance and service procedures. In some cases the maintenance and service procedures must be adapted to your application. A short explanation for each item is listed in chapter 5.3, page 66 ff. and chapter 5.4, page 74 ff..

5.1 Shut down procedure for an extended time period

- End RUN mode (chapter 4.5.3, page 57).
- Close off sample lines.
- Empty tubing system.
- Empty and clean fermenter (→ point 3.9) in chapter 5.4, page 74 ff.).
- Save the bacteria in a refrigerator. Do not freeze the bacteria.
- Switch off the analyser with the main switch (Fig. 9:, page 19).
- Slacken the pump and valve tubing.

5.2 Control, maintenance and service table

A detailed description of maintenance and service tasks is shown inchapter 5.3, page 66 ff. and chapter 5.4, page 74 ff..
Explanation of abbreviations:

D	Daily
W	Weekly
M	Monthly
3M	Every 3 months
6M	Every 6 months
Y	Yearly
C&M	Control & Maintenance
S	Service (change of worn parts and consumables)

Table 4: Maintenance and serviceTasks

Maintenance and service task	D	W	M	3M	6M
1) Visual check and analyser status control	C&M				
2) Checking the measurement signal		C&M			
3) Fermentation vessel					
3.1) Checking the fermentation vessel		C&M			
3.2) Checking the fermenter aeration (aeration stone and aeration points)		C&M			
3.3) Cleaning the flooding border and the border of the Fermentation vessel			C&M		
3.4) Checking the temperature in the fermentation vessel			C&M		
3.5) Checking the dosage rate of the nutrient solution		C&M			
3.6) Checking air flow volume				C&M	
3.7) Rinsing the measurement cell (if necessary)				C&M	
3.8) Cleaning aeration stone, if necessary replacing			S		
3.9) Emptying and cleaning the fermentation vessel					S
4) pH sensor					
4.1) Checking the pH value		C&M			
4.2) Checking pH sensor with test solution			S		
4.3) Calibration of pH sensor				S	
5) Reagents/Solutions					
5.1) Checking solutions in containers		C&M			
5.2) Filling up solution		C&M			
5.3) Cleaning all canister					C&M
6) Pumps / Valves					
6.1) Checking the pinch valves				C&M	
6.2) Checking the rollers of the pump head				C&M	
6.3) Cleaning the pump head and checking the pump head adjustment				C&M	
7) Tubes					
7.1) Checking drains and drain tubes, clean if necessary			C&M		
7.2) Checking the valve tubes and pump tubes			C&M		
7.3) Shifting the valve tubes and pump tubes				S	
7.4) Replacing the valve tubes and pump tubes					S
7.5) Checking tube system / removing the sediments / replacing					C&M S
8) Measurement cell					
8.1) Checking the dosage rate of the biomass into the measurement cell		C&M			
8.2) Checking the measurement cell			C&M		

Table 4: Maintenance and serviceTasks

Maintenance and service task	D	W	M	3M	6M
8.3) Visual check of the oxygen sensor			C&M		
8.4) Emptying and cleaning the measurement cell					S
8.5) Disassembling / cleaning / assembling / calibrating the oxygen sensor (if necessary)				S	
9) Biomass Refeed Unit (BMR)					
9.1) Checking BMR vessel and dosage rate		C&M			
10) Growth powder unit					
10.1) Checking growth powder unit and dosage rate		C&M			
10.2) Filling up		C&M			
10.3) Cleaning			C&M		
11) FlowSampler® (optional)					
11.1) Checking the flow		C&M			
11.2) Visually checking the centrepieces				C&M	
11.3) Cleaning				C&M	

Note:
- Do not drink any solution from the device (biomass, nutrient solution, drain solution etc.).
- Do not grab into the fermentation vessel without gloves and protective glasses.
- If you get any solution (biomass, nutrient solution, drain solution etc.) in mucous membranes or of any other body part, please wash it out with clean and pure water (e.g. demineralised water).
- The device is under power, do not work with wet hands.
- Wash your hands after working on NitriTox®.

If you have problems with the maintenances and service (if any part or value looks questionable or you are not sure about the correctness), please contact a authorized personnel by LAR or **the LAR technical support (chapter 10.2, page 111).**

5.3 Description of the individual control and maintenance Task

Note:
- The maintenance of the device is a recommendation by LAR and is depends on the application.
- Duration of maintenance is 30 min per week.

Table 4, page 64 ff. gives an overview of the following maintenance tasks:

1) Visual check and analyser status control
Please record the data:
- Dosage
- Temperatures
- pH value
- Oxygen calibration
- Oxygen consumption

In level II, on the “status screen“(Fig. 8:, page 18), the status control of the analyser can be checked, also Fig. 21:, page 34.

2) Checking the measurement signal
This is a visual check:
Check, if something is abnormal with the signal (e.g. curves are too low, the signal is a curve or something else).

3) Fermentation vessel
3.1) Checking the fermentation vessel
This is a visual check:
Check, if something appears to be abnormal (e.g. if excessive growth of biomass is existing; if fill level is normal or if the fermentation vessel has a leakage and so on).

3.2) Checking the fermenter aeration (aeration stone and aeration points)
This is a visual check:
Check, if air comes out of all four holes at the bottom of the fermentation vessel (regular bubbles) and also from the aeration stone, which is placed inside of the fermenter vessel. The value can also check on the display of the digital flow switcher. The flow switcher is placed in the back of the front panel.

Default value of aeration stone	3.5 l/min
Minimum value	3 l/min
Maximum value	4.2 l/min
Default value of aeration points	0.8 l/min
Minimum value	0.5 l/min
Maximum value	1.2 l/min

If the values under the minimum value or over the maximum value, please contact **LAR technical support (chapter 8.2, page 73).**

3.3) Cleaning the flooding border and the border of the Fermentation vessel
Sticking films of biomass should be removed entirely.
Clean and wash the flooding border and the border of the fermentation vessel. Carefully clean the upper edge of the fermentation vessel. Use gloves and protective glasses during cleaning.
Afterwards spout out the flooding border with a spout bottle (demineralized water) avoiding at all costs that the films from the flooding border or the water of the bottle enters the fermentation vessel.
If necessary: remove liquid from the fermenter by aid of a syringe and wash out sediments or remove them with an appropriate brush (e.g. bottle brush).

3.4) Checking the temperature in the fermentation vessel
Check the temperature of the culture fluid in the fermentation vessel with a external thermometer. The temperature should be at 27 - 28°C (80.6 - 82.4°F).

3.5) Checking the dosage rate of the nutrient solution
This is a visual check:
The dosage is checked by switching to the measurement value screen (Fig. 37: on page 51) in level I or in status screen (Fig. 36: on page 50) in level II.

Default value	160 - 250 ml/h

3.6) Checking air flow volume
If you want to carry out this maintenance in addition to planned standard maintenance, please first terminate possible ongoing measurements with the red “offline“ button (chapter 4.5.3, page 57 ff.).
For this control an air flow meter is required. The air flow volumes that are checked are:
- aeration of the measurement cell 100 l/h
- aeration of the fermenter 260 l/h (aeration stone 210 l/h and inlet 50 l/h) (depending on the application)
- air for BMR 300 l/h
- aeration of the reference water 20 l/h

In order to check the air flow volume the air flow meter has to be connected at the single points with the air tubes.
After this task, the measurement can be started again.

3.7) Rinsing the measurement cell (if necessary)
If you want to carry out this maintenance in addition to planned standard maintenance, please first terminate possible ongoing measurements with the red “offline“ button (chapter 4.5.3, page 57 ff.).
Ventilating the measuring cell is necessary to remove bigger bacteria flakes, residues of the sample ingredients or dirt.
For that task press the button “filling tubes and measurement cell“ (see chapter 4.4.3 on page 32).
After this check and maintenance task, the measurement can be started again.

3.8) Cleaning aeration stone, if necessary replacing
This task is a service task (see → point 3.8) in chapter 5.4, page 74 ff.).

3.9) Emptying and cleaning the fermentation vessel
This task is a service task (see → point 3.9) in chapter 5.4, page 74 ff.).

4) pH sensor
4.1) Checking the pH value
This is a visual check:
The current pH value in the fermentation vessel is stated on the status screen (Fig. 8: on page 18) in level II. The pH value can also be tested manually with pH strips or a pH meter. The pH value should be pH 7.60.

4.2) Checking pH sensor with test solution
This task is a service task (see → point 4.2) in chapter 5.4, page 74 ff.).

4.3) Calibration of pH sensor
This task is a service task (see → point 4.3) in chapter 5.4, page 74 ff.).

5) Reagents/Solutions
5.1) Checking solutions in containers
This is a visual check:
Is enough solution in the different canisters (nutrient solution, cleaning solution, reference water)? If the solutions need to be filled up, please prepare a new one and if necessary clean the canister. See → point 5.2).

5.2) Filling up solution
If you want to carry out this maintenance in addition to planned standard maintenance, please first terminate possible ongoing measurements with the red “offline“ button (chapter 4.5.3, page 57 ff.).
Please dispose rests of unused solutions and make sure that the fresh liquids do not contain any residues of toxic substances/chemicals. If the canisters are dirty, please clean them (see → point 5.3) Cleaning all canister).
For instruction about how to prepare the nutrient solution see chapter 3.2.1 on page 8. It needs to be stirred thoroughly, to make sure that all nutrient salts are dissolved and completely mixed.
For instruction about how to prepare the cleaning solution see chapter 3.2.2 on page 8.
For instruction about how to prepare the ATU solution see chapter 3.2.3 on page 9.
After this check and maintenance task, the measurement can be started again.

5.3) Cleaning all canister
If you want to carry out this maintenance in addition to planned standard maintenance, please first terminate possible ongoing measurements with the red “offline“ button (chapter 4.5.3, page 57 ff.).
Please dispose rests of unused solutions and make sure that the fresh liquids do not contain any residues of toxic substances/chemicals. Sticky dirt in the canisters can be removed using the bottle brush and rinsing again with water. Renew the solutions (see → point 5.2) Filling up solution) and fill up the canisters.
After this task, the measurement can be started again.

6) Pumps / Valves
6.1) Checking the pinch valves
If you want to carry out this maintenance in addition to planned standard maintenance, please first terminate possible ongoing measurements with the red “offline“ button (chapter 4.5.3, page 57 ff.).
Press into the pinch valve and if it moves smoothly then it is correct. If not, please contact **LAR technical support (chapter 8.2, page 73).**
After this task, the measurement can be started again.

6.2) Checking the rollers of the pump head
If you want to carry out this maintenance in addition to planned standard maintenance, please first terminate possible ongoing measurements with the red “offline“ button (chapter 4.5.3, page 57 ff.).
All pumps need to be turned off to check and clean them. In order to check the free movement of the rollers, the pump head needs to be opened (see chapter 3.4, page 11 ff.). The tubes need to be taken out to check, if the rollers can be turned with the finger. If the rollers move easily, the tubes can be put back into the pump. Then all pumps should be turned on, to check and clean. If the rollers are difficult to move or cannot be moved at all, please contact **LAR technical support (chapter 8.2, page 73).**
After this task, the measurement can be started again.

Note:
Please make sure that pumps are switched off.
Risk of injury!

6.3) Cleaning the pump head and checking the pump head adjustment

If you want to carry out this maintenance in addition to planned standard maintenance, please first terminate possible ongoing measurements with the red “offline“ button (chapter 4.5.3, page 57 ff.).

Cleaning:

- Pump head needs to be opened (see chapter 3.4, page 11 ff.).
- Take the tubes out of the pump housing.
- In order to clean the pump rollers, a wet paper towel can be used.
- In order to clean all parts of the rollers, they need to be turned by hand.

Settings: Fig. 43: Shows the adaption of the pump heads.

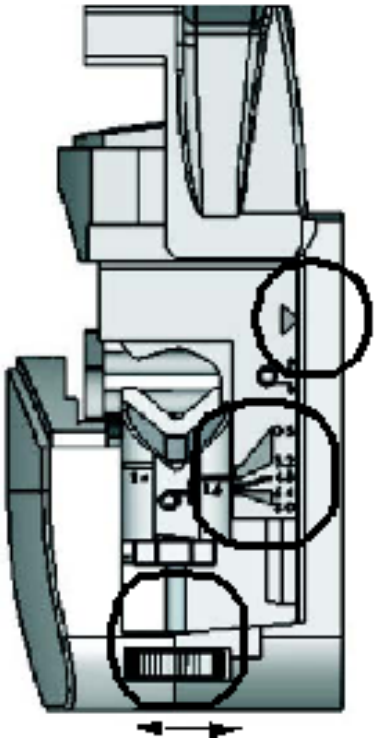

position: lid is open

setting value

little wheel for adjustment

Fig. 43: Adjustment of the pump head

Note:
The rollers and tubes should not be greased!

Follow these steps to adjustment of pump head:

- Open the pump head completely. The lid should be vertical.
- Check the pump head settings (see Fig. 43: upper marking).
- When the pump does not show the default value of 6.4 (Fig. 43: middle marking), please do the following:
- Turn the little wheel until the position of 6.4 is reached (Fig. 43: lower marking).

Note:
The pump should be set to the above-named value, as any deviating value can cause low pump capacity, following into incorrect results.

After the maintenance, the pumps need to be switched on again. After this task, the measurement can be started again.

7) Tubes

7.1) Checking drains and drain tubes, clean if necessary

This is visual check:
Are the drains and drain tubes dirty or blocked?
In this case they need to be cleaned with purified water and a bottle brush.
NitriTox® has three drain tubes: one for the effluent from the measurement cell, another one is fixed at the settling vessel as overflow drain (see Fig. 18: on page 26). The third tube is also fixed to the settling vessel, but is only being used for the condensate. Therefore this last tubing must only be connected to ambient air.
All drain tubes need a pressureless end. This can be realised e.g. by floor drainage, the drain connection of the FlowSampler® (optional), a sink or any other pressureless drain. The tubes can not be extended outside of NitriTox®. For the drain tube of the settling vessel it is also important, that any possibility of a backlog of the liquid or an insufficient gradient of the drain needs to be avoided.
The tubes become brittle after a certain time and loose their elasticity. Attention needs to be paid to brittleness and contamination. In case of one or both of these conditions, it will need replacing → point 7.5) in chapter 5.4, page 74 ff..

7.2) Checking the valve tubes and pump tubes

In case of the pinch valve tubes and pump tubes got damaged by pressing spot of the valve, the tube must be moved a little further to place the pressing spot an intact part of the tubing material (see → point 7.3) in chapter 5.4, page 74 ff.).

7.3) Shifting the valve tubes and pump tubes

If you want to carry out this maintenance in addition to planned standard maintenance, please first terminate possible ongoing measurements with the red “offline“ button (chapter 4.5.3, page 57 ff.).
Every three months, tubes should be checked and shifted. The pinch valve tubes and pump tubes got damaged by pressing spot of the valves or pumps, the tubes must be moved a little further to place the pressing spot to an intact part of the tubing (chapter 3.4, page 11 ff.).
After this task, the measurement can be started again.

7.4) Replacing the valve tubes and pump tubes

This task is a service task (see → point 7.4) in chapter 5.4, page 74 ff.).

7.5) Checking tube system / removing the sediments / replacing

If you want to carry out this maintenance in addition to planned standard maintenance, please first terminate possible ongoing measurements with the red “offline“ button (chapter 4.5.3, page 57 ff.).
Check the whole tube system for sediments. If sediments are visible, remove them using the menu item „filling tubes and measurement cell“ (see chapter 4.4.3 on page 32).
After this task, the measurement can be started again.

Note:
If the sediments are not removed after the flushing the tubes, the tubes need to be replaced (see chapter 3.4, page 11 ff.).

8) Measurement cell

8.1) Checking the dosage rate of the biomass into the measurement cell

This is a visual check:

Watch one measurement cycle and check, if the biomass is being added into the measurement cell. The biomass is being added after the analysis of the oxygen stability of the sample.

8.2) Checking the measurement cell

The measurement cell is fully operational, when the fluid inside is turbid and no bubbles enter, form or exist during the analysis. Especially the presence of air indicates a failure. While checking the measuring cell it should also be checked whether the stirring magnet rotates regularly and whether flakes are visible in the measuring cell.

8.3) Visual check of the oxygen sensor

If you want to carry out this maintenance in addition to planned standard maintenance, please first terminate possible ongoing measurements with the red “offline“ button (chapter 4.5.3, page 57 ff.).

This is a visual check:

First the sensor needs to be taken out of the measurement cell (see chapter 8.4.3.2, page 96 ff.).

The bottom of the O_2 sensor needs to be checked for:

- color of the bottom (should be black, not coated),
- residues (e.g. biomass on top) and
- bubble.

In case the sensor is clean and without infestation it can be put back into the measurement cell, if not the sensor has to be cleaned with purified water and a new calibration has to be done (chapter 4.4.4, page 34 ff.).

After this task, the measurement can be started again.

8.4) Emptying and cleaning the measurement cell

This task is a service task (see → point 8.4) in chapter 5.4, page 74 ff.).

8.5) Disassembling / cleaning / assembling / calibrating the oxygen sensor (if necessary)

This task is a service task (see → point 8.5) in chapter 5.4, page 74 ff.).

9) Biomass Refeed Unit (BMR)

9.1) Checking BMR vessel and dosage rate

This is a visual check:

- If the biomass is refeed back in the fermentation vessel
- Does the biomass drop in the settling vessel?

In order to check the dosing of the biomass, the valve (Y7 see Fig. 6:, page 15) for the BMR needs to be activated. If you want to carry out this maintenance in addition to planned standard maintenance, please first terminate possible ongoing measurements with the red “offline“ button (chapter 4.5.3, page 57 ff.). This valve Y7 is located over the biomass return vessel. When the valve is activated (press Y7), biomass needs to get into the fermenter. The tube can be blocked or the hole in the fermenter lid. Check both. If the tube should be the reason, it can easily be exchanged (see chapter 3.4.2, page 13 ff.). If no solution is transported, a blockage of the tube from the vessel to the fermenter could be the reason. The tube can easily be exchanged (see chapter 3.4, page 11 ff.). If it is a blockage at the fermenter lid, the tube needs to be pulled out and the blockage needs to be removed with a syringe.

If there is a deposit of biomass at the edge of the vessel, it can be removed with a syringe. Remove the BMR lid and draw the biomass liquid into the syringe. Hold the full syringe at the edge of the vessel and let liquid run out. Alternatively you can use the bottle brush.

After this task, the measurement can be started again.

10) Growth powder unit

10.1) Checking growth powder unit and dosage rate

This is a visual check:

- Is growth powder solution getting transported in the fermenter?
- Is enough growth powder available?

In order to check the dosing of the growth powder, the valve (Y8 see Fig. 6: on page 15) for the growth powder unit needs to be activated. If you want to carry out this maintenance in addition to planned standard maintenance, please first terminate possible ongoing measurements with the red “offline“ button (chapter 4.5.3, page 57 ff.). This valve Y8 is located over the biomass return vessel. When the valve is activated (press Y8), growth powder solution needs to get into the fermenter. The tube can be blocked or the hole in the fermenter lid. Check both. If the tube should be the reason, it can easily be exchanged (see chapter 3.4.2, page 13 ff.). If no solution is transported, a blockage of the tube from the vessel to the fermenter could be the reason. The tube can easily be exchanged (see chapter 3.4, page 11 ff.). If it is a blockage at the fermenter lid, the tube needs to be pulled out and the blockage needs to be removed with a syringe.
If there is no solution (see → point 10.2) Filling up) or its dirty (see → point 10.3)).

10.2) Filling up

If you want to carry out this maintenance in addition to planned standard maintenance, please first terminate possible ongoing measurements with the red “offline“ button (chapter 4.5.3, page 57 ff.).
Please now renew solution (see chapter 2.2.14 on page 29).
After this task, the measurement can be started again.

10.3) Cleaning

If you want to carry out this maintenance in addition to planned standard maintenance, please first terminate possible ongoing measurements with the red “offline“ button (chapter 4.5.3, page 57 ff.).
If the vessel is dirty, you can take it out and clean it. Only clean it using purified water and a bottle brush.
After cleaning the vessel, tube it and fill it with new growth powder solution.
After this task, the measurement can be started again.

11) FlowSampler® (optional)
11.1) Checking the flow
This is a visual check. Check if liquids are transported (see Fig. 44:, window).

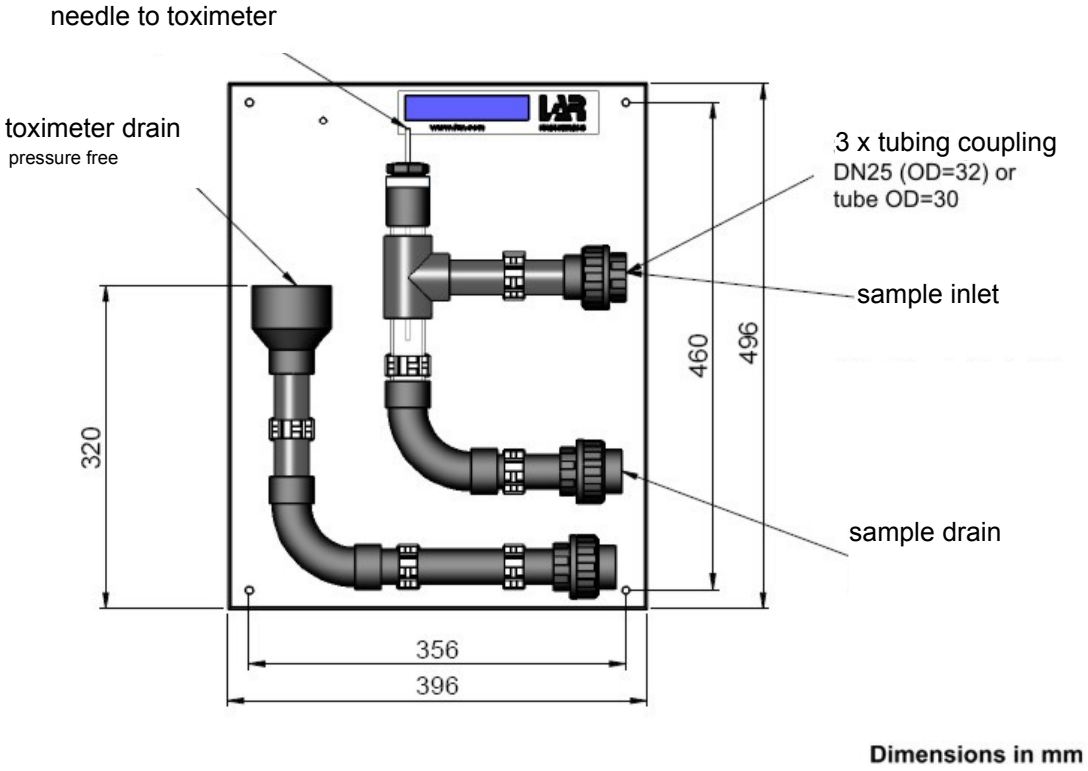

Fig. 44: FlowSampler®

If you cannot see a flow of liquid, please contact **L AR technical support (chapter 10.2, page 111).**

11.2) Visually checking the centrepieces
Check the needle for contamination and deposits, clean it if necessary. The needle can be dismantled and changed with a spanner. After cleaning, the needle needs to be reassembled.

11.3) Cleaning
If you want to carry out this maintenance in addition to planned standard maintenance, please first terminate possible ongoing measurements with the red “offline“ button (chapter 4.5.3, page 57 ff.).
- close sample inlet of your process.
- clean sample tubing with pipe cleaner.
- if necessary, replace tubing to the analyser.
- reconnect all connections.
- open sample inlet of your process.

After this task, the measurement can be started again.

5.4 Description of the service task

Note:
- Service is the exchanging of parts worn by wear part and normal tear.
- Duration of service is 5 - 10min/per week.

Table 4, page 64 ff. gives an overview of the following service tasks:

1) Visual check and analyser status control
See → point 1) in chapter 5.3, page 66 ff..

2) Checking the measurement signal
See → point 2) in chapter 5.3, page 66 ff..

3) Fermentation vessel
3.1) Checking the fermentation vessel
See → point 3.1) in chapter 5.3, page 66 ff..

3.2) Checking the fermenter aeration (aeration stone and aeration points)
See → point 3.2) in chapter 5.3, page 66 ff..

3.3) Cleaning the flooding border and the border of the Fermentation vessel
See → point 3.3) in chapter 5.3, page 66 ff..

3.4) Checking the temperature in the fermentation vessel
See → point 3.4) in chapter 5.3, page 66 ff..

3.5) Checking the dosage rate of the nutrient solution
See → point 3.5) in chapter 5.3, page 66 ff..

3.6) Checking air flow volume
See → point 3.6) in chapter 5.3, page 66 ff..

3.7) Rinsing the measurement cell (if necessary)
See → point 3.7) in chapter 5.3, page 66 ff..

3.8) Cleaning aeration stone, if necessary replacing
If you want to carry out this maintenance in addition to planned standard maintenance, please first terminate possible ongoing measurements with the red “offline“ button (chapter 4.5.3, page 57 ff.).
In order to clean (exchange) the aeration stone, the fermenter lid needs to be removed (little screw see Fig. 45:, page 75). The aeration stone is also pulled out with the lid. If the stone is not visible yet you can pull the tube. Now the stone can be pulled off. Clean the aeration stone with distilled water and air pressure. If no air is through the aeration stone and not enough bubbling are produced in the fermenter, exchange the aeration stone. A new stone can be installed.
After this task and the fermenter lid with cleaned or exchange aeration stone, the measurement can be started again.

Note:
Use gloves and safety goggle for that service task.

3.9) Emptying and cleaning the fermentation vessel

If you want to carry out this maintenance in addition to planned standard maintenance, please first terminate possible ongoing measurements with the red “offline“ button (chapter 4.5.3, page 57 ff.).

For emptying the fermentation vessel use the tube at the point A on Fig. 45: on page 75.

- Have a 5l measuring cup under the toximeter ready, thus the biomass can drain into.
- Open the clip at the tube and allow the tube straight into the measuring cup.
- When the biomass is drained, clean the fermenter with clean water. For that: Have a new 5l measuring cup under the analyser and rinse the fermentation vessel with clean water.
- After that, close the clip at the tube A (Fig. 45: on page 75) and fill the biomass back into the fermentation vessel.

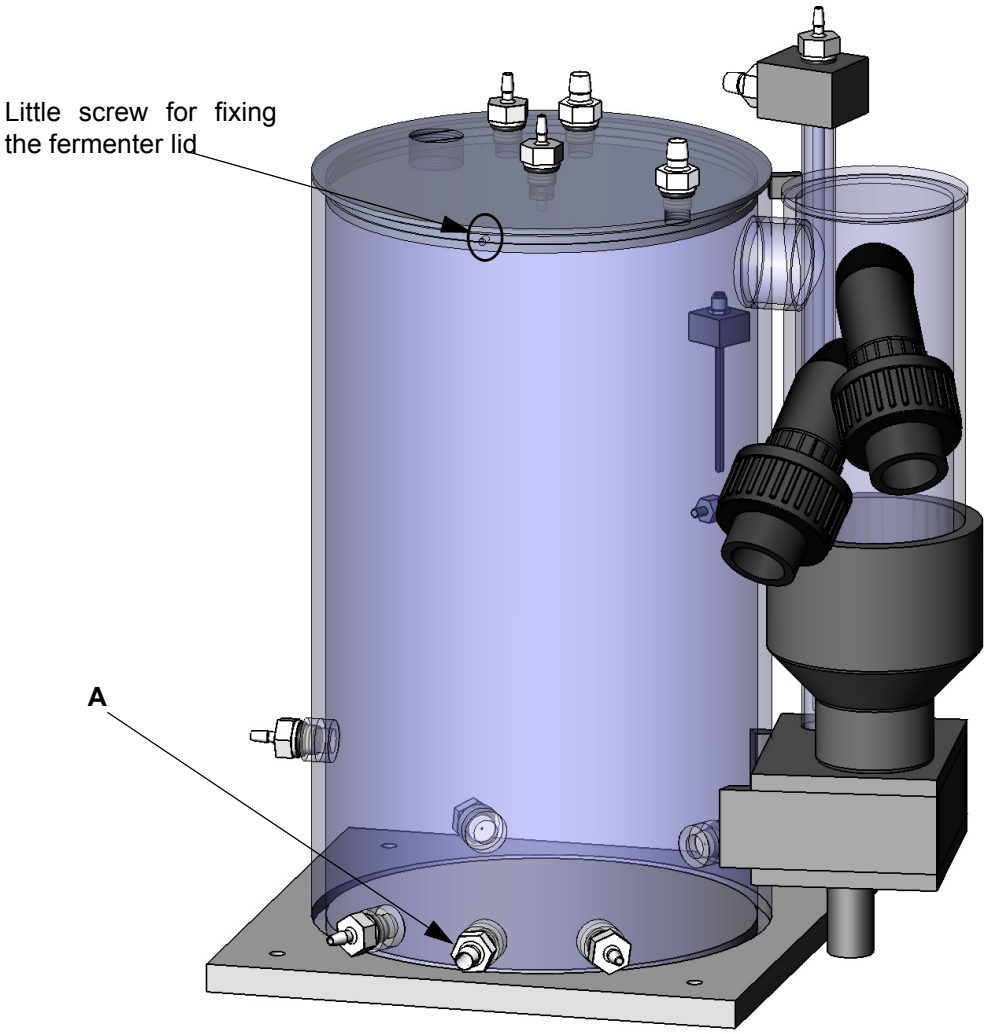

Fig. 45: Fermenter vessel and BMR unit

After this task, the measurement can be started again.

4) pH sensor
4.1) Checking the pH value
See → point 4.1) in chapter 5.3, page 66 ff..

4.2) Checking pH sensor with test solution
If you want to carry out this maintenance in addition to planned standard maintenance, please first terminate possible ongoing measurements with the red “offline“ button (chapter 4.5.3, page 57 ff.).
Before a new calibration of the pH sensor is done, a check with a known testing solution can be carry out to evaluate the recent calibration. To do this the pH sensor is taken out of the fermenter lid and put into a known test solution (buffer solution) the pH value is shown in the status screen (Fig. 8:, page 18). If the value is the same as the one of the buffer solution, a new calibration is not necessary. If the value is wrong, the sensor needs to be calibrated (see chapter 4.4.5 on page 37). Before the sensor is put back into the fermenter it needs to be cleaned with purified water.
After this task, the measurement can be started again.

4.3) Calibration of pH sensor
If you want to carry out this maintenance in addition to planned standard maintenance, please first terminate possible ongoing measurements with the red “offline“ button (chapter 4.5.3, page 57 ff.).
See chapter 4.4.5 on page 37.
After this task, the measurement can be started again.

5) Reagents/Solutions
See → point 5) in chapter 5.3, page 66 ff..

6) Pumps / Valves
See → point 6) in chapter 5.3, page 66 ff..

7) Tubes
7.1) Checking drains and drain tubes, clean if necessary
See → point 7.1) in chapter 5.3, page 66 ff..

7.2) Checking the valve tubes and pump tubes
See → point 7.2) in chapter 5.3, page 66 ff..

7.3) Shifting the valve tubes and pump tubes
If you want to carry out this maintenance in addition to planned standard maintenance, please first terminate possible ongoing measurements with the red “offline“ button (chapter 4.5.3, page 57 ff.).
The tubes are fixed in the pump/valve and are exposed to a strong mechanical load. In order to extent the life span of the tubing, every three months they should be taken out of the pump/valve, cleaned and moved forward, so that a different part of the tubing is now fixed and loaded. Before the tubing should be oiled. You can see the pump on opening the lower front plate at the lower right. In order to shift the tubes forward, the pump needs to be switched off on the screen “Digital Out1“ in level III (chapter 13.2.7, page 126 ff.). After the service, the pump/valve needs to be switched on again and the measurement can be started again.

7.4) Replacing the valve tubes and pump tubes
If you want to carry out this maintenance in addition to planned standard maintenance, please first terminate possible ongoing measurements with the red “offline“ button (chapter 4.5.3, page 57 ff.).
The replacement of all tubes should be carried out at the same time. But to avoid wrong tubing settings unintentionally, it is advisable to change them one after another. See chapter 3.4.2 on page 13 and chapter 3.4.3 on page 14.
After this task, the measurement can be started again.

7.5) Checking tube system / removing the sediments / replacing
See → point 7.5) in chapter 5.3, page 66 ff..

8) Measurement cell

8.1) Checking the dosage rate of the biomass into the measurement cell

See → point 8.1) in chapter 5.3, page 66 ff..

8.2) Checking the measurement cell

See → point 8.2) in chapter 5.3, page 66 ff..

8.3) Visual check of the oxygen sensor

See → point 8.3) in chapter 5.3, page 66 ff..

8.4) Emptying and cleaning the measurement cell

If you want to carry out this maintenance in addition to planned standard maintenance, please first terminate possible ongoing measurements with the red “offline“ button (chapter 4.5.3, page 57 ff.).
For emptying the measuring cell use the menu item “filling tubes and measurement cell“ in the screen “rinsing parameter“ (chapter 4.4.3 on page 32).

- Exchange sample with 2% citric acid and start the process “filling tubes and measurement cell“.
- Carry out this task again until contamination is gone.
- After cleaning the measurement cell, please fill the tubes and cell two times with water.

After this task, the measurement can be started again.

8.5) Disassembling / cleaning / assembling / calibrating the oxygen sensor (if necessary)

If you want to carry out this maintenance in addition to planned standard maintenance, please first terminate possible ongoing measurements with the red “offline“ button (chapter 4.5.3, page 57 ff.).
The oxygen sensor is disassembled by pulling the sensor out of the measuring cell. Please clean adhering dirt off the sensor with a white paper towel and water. After cleaning put the oxygen sensor back in the measurement cell.
The calibration of the oxygen sensor is performed using aerated demineralized water. Please go to chapter 4.4.4, page 34 ff..
After this task, the measurement can be started again.

9) Biomass Refeed Unit (BMR)

See → point 9) in chapter 5.3, page 66 ff..

10) Growth powder unit

See → point 10) in chapter 5.3, page 66 ff..

11) FlowSampler® (optional)

See → point 11) in chapter 5.3, page 66 ff..

6 Optimisation

For further instructions or wishes, please contact **LAR technical support (chapter 10.2, page 111).**

7 Troubleshooting

7.1 Errors during operation

In case of any malfunctions without obvious cause during the operation of the analyser, carry out the following checks:

a. Environmental conditions
Please check if the ambient temperature is in the permissible range of 5 – 35 °C (41 - 95 °F).
The relative air humidity must not exceed 80 % and no odour pollution.

b. Used chemicals
If you have any problem with your analyser, it is advisable to prepare all solutions again to be on the safe side.

c. System configuration
Make sure that the system configuration (e.g. measurement frequency) is correct. Note down operating parameters before you contact LAR. An electronic copy (screenshot) can be taken using the screenshot button and it can be stored on the USB stick.

d. Auto start after power failure
After a power failure, an automatic start of the analyser is carried out if the analyser was in measurement mode at the time of the power failure. The auto start can be stopped with the red “offline“ button. After the auto start, the analyser will continue with the measurement.

7.2 Interpreting failure indications correctly

During the measurement, indications of various failures may be reported on screen. Possible causes and the necessary action are described in the table below: If the information given in this section does not help, please get in touch with **LAR technical support (chapter 9.2, page 158)** to get help quickly.

Table 5: Trouble shooting

Problems	Actions
The device does not start after connecting the power-supply plug and power on	Outlet without voltage? Check the internal circuit breakers and if necessary change fuses (F1, F2, F3)
No biomass refeed	Check the hole in the fermentation vessel lid. Is is clogged? Check lifter for blockages.
No delivering of sample, reference water or cleaning solution into the measuring cell	Check the correct position of tube in the pump head and pinch valves. Is there any leakage in the line?

7.2.1 O_2 concentration too low

This message appears when the oxygen concentration has dropped below a certain minimum value. This means that the supplied sample is insufficiently aerated, so that the measured values must be dropped by.
In the following table the indications of NitriTox® and the remedies are comprised:

Table 6: Indications and remedies

Indication	Possible Cause	Actions
O_2 concentration too low	The supplied sample is insufficiently aerated	The samples should be led to the toximeter via the aeration container or with the aeration duration water
Limit set point(s) underbid	The O_2 concentration has underbid the determined limit set points, which may indicate a toxic event	Note: If limit relays have been adjusted, they must have been tripped

7.3 Problems during the recording of measured values

In case of other problems with the recording of measured values, please check the device according to the following steps:

Sewage supply:	• Has the sample been delivered to the device? If FlowSampler® is in operation (optionally): • Has the sample been delivered to the FlowSampler®? • Has the sample been delivered from the FlowSampler® to the device?
Peristaltic pumps:	• Are the tubes in the peristaltic pumps older than 3 months? • Do the tubes in the peristaltic pumps have small faults? In this case the tubes must be replaced • Is the drain free of blockages?
Environmental conditions:	• Please check, whether the ambient temperature is within the permissible range of 5-35°C (41 - 95°F).

Call your local service or the **LAR technical support (chapter 10.2, page 111)** - we gladly advise you!

8 Installation

8.1 Choice of site - surrounding area

- A dry and frost-free site is preferable for the set-up.
- The permitted range of temperature is between 5 °C to 35 °C (41 - 95 °F).
- Relative humidity should be max. 80%.
- Direct sun light should be avoided.
- Power supply: 230 V or 115 V/ 50 Hz, max. 1000 VA.
- Ambient air should be clean, otherwise contamination gets into the fermenter.

8.2 Mounting

Usually the analyser is directly mounted to a wall (Fig. 47:, page 87). It is also possible to order a mounting rack (chapter 8.2.2, page 88 ff.) to attach the analyser to.

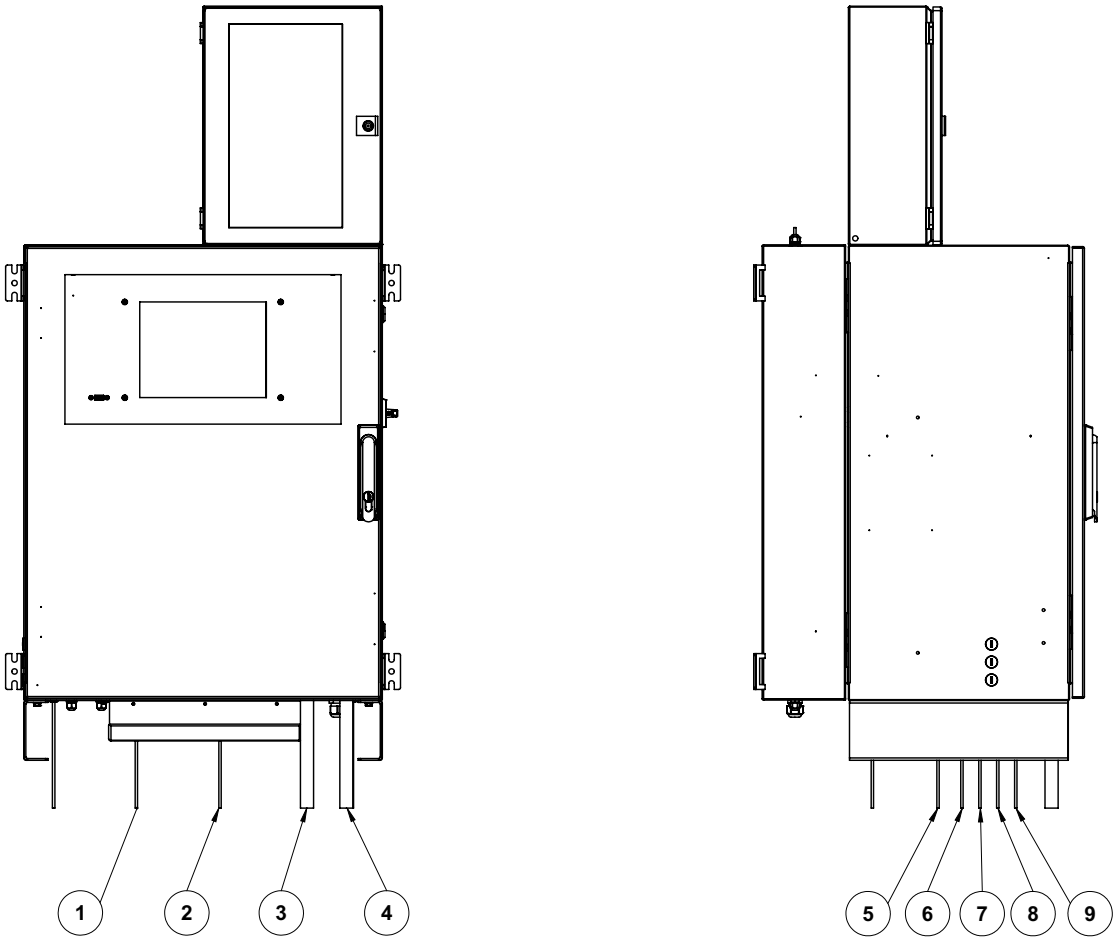

Number	Description		
1	Drain	PVC	OD=8mm
2	Air supply reference water	PVC	OD=4mm
3	Biomass drain	PVC	OD=20mm
4	Condensate drain	PVC	OD=20mm
5	Sample inlet	PVC	OD=4mm
6	ATU inlet	PVC	OD=4mm
7	Reference water inlet	PVC	OD=4mm
8	Cleaning solution inlet	PVC	OD=4mm
9	Nutrient solution inlet	PVC	OD=4mm

Fig. 46: NitriTox®

8.2.1 Wall Mounting

Please consider the stability of the wall when choosing the site. The wall should have the solidity of a concrete wall. No concrete walls are inappropriate for the assembly. Please use four armature bolts for the analyser's wall mounting.

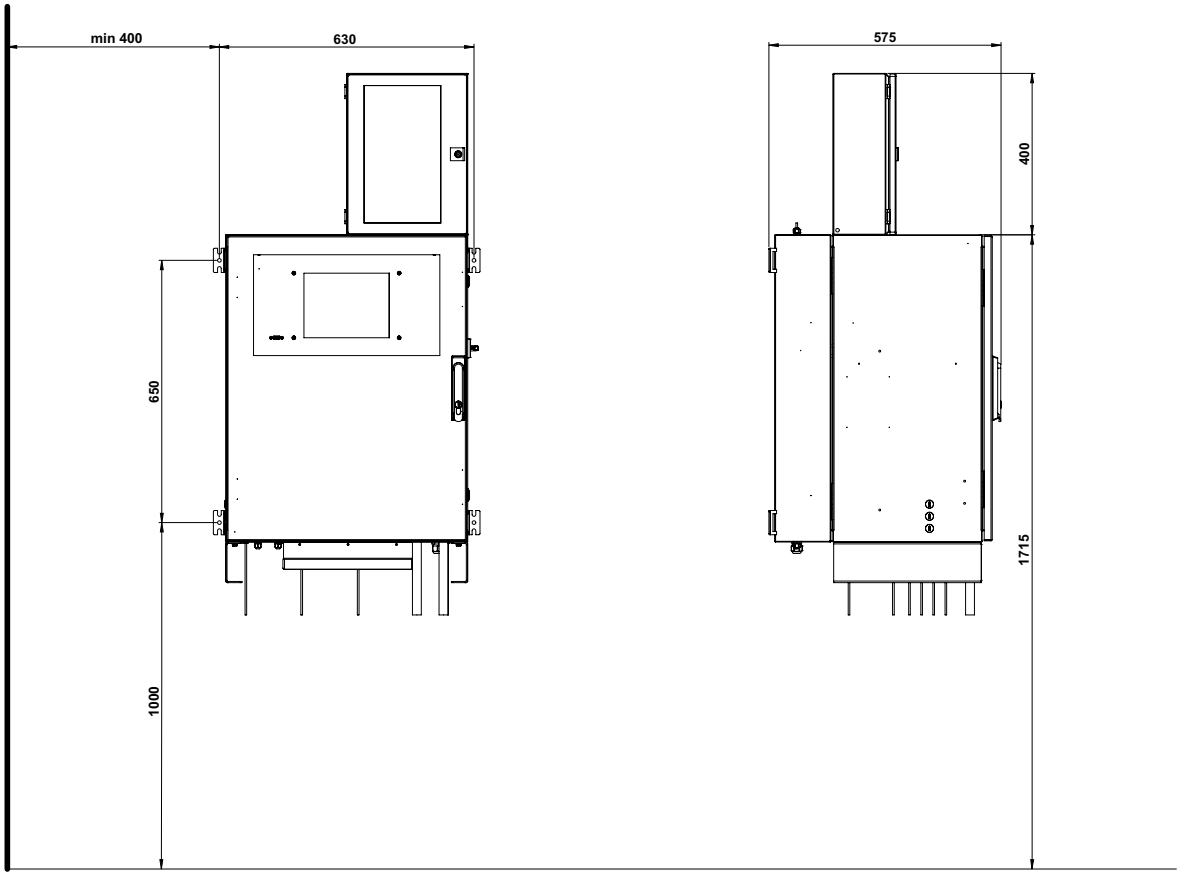

Fig. 47: NitriTox®

Note:
Our LAR support does not carry out any building or mounting work. The mounting of the analyser and specific options are to be overseen by the customer.
One aspect to bear in mind is the space required for the analyser door to be fully opened.

8.2.2 Mounting Rack

As mentioned in chapter 8.2, page 86 ff., there is the option to have the analyser delivered with an additional mounting rack.
The following distance requirements should be considered:
2000 mm height x1000 mm width x 815 mm depth.
The space requirement for the opened analyser is 12850 x 1100 mm (width x depth) with at least 450 mm distance between the mounting rack edge and the wall.
Fig. 48: shows the pre-assembled mounting rack.

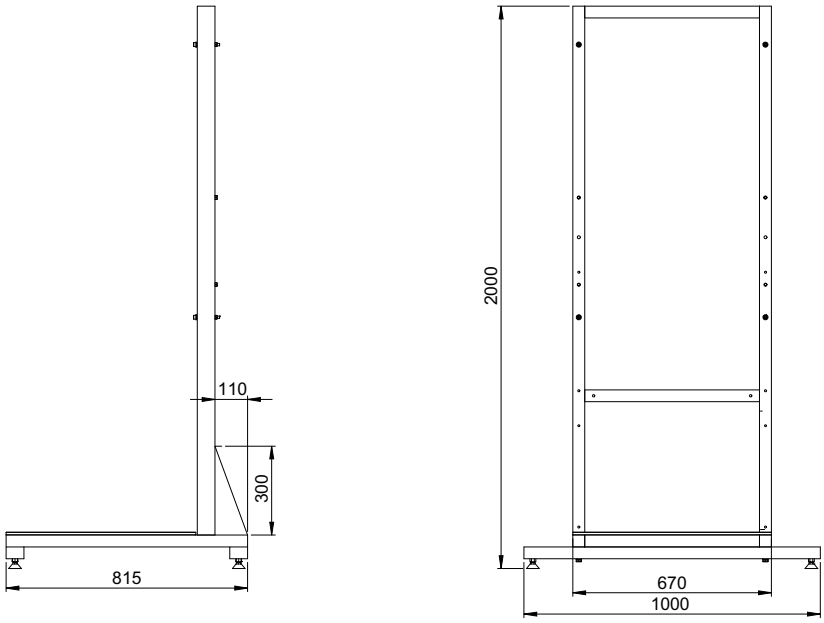

Fig. 48: Pre -assembled mounting rack

Install the cross braces and adjustable feet on the mounting rack.

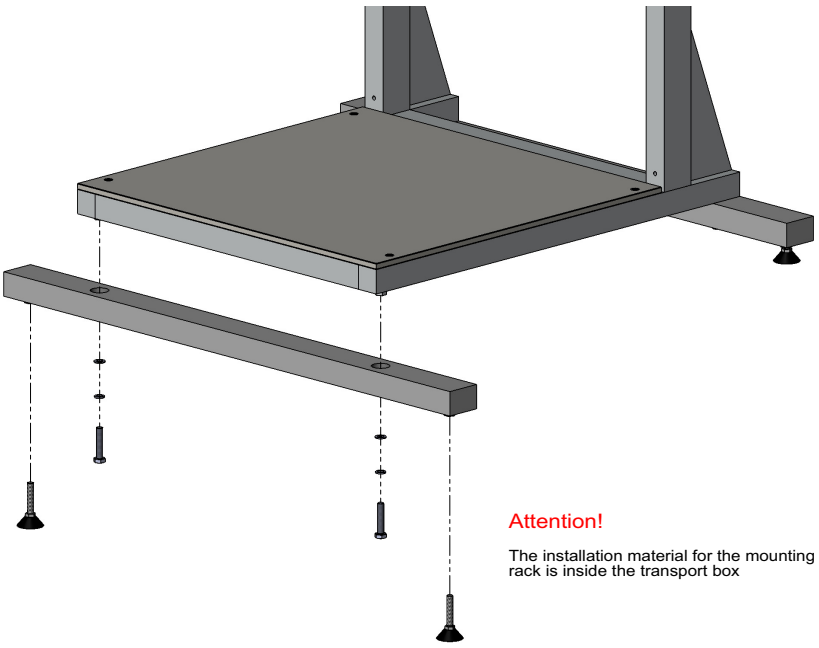

Fig. 49: Assembly of mounting rack

There are two options to attach the analyser to the mounting rack:

1) The simpler method is to place the analyser and mounting rack in horizontal positions, then to lay the analyser on the mounting rack after pre-assembly and attach with four M8 screws. After that, it is raised into a vertical position using a crane.

or

2) The analyser is directly mounted with four screws onto the vertical rack. First, insert two screws into the upper two holes of the mounting rack. Ensuring that they protrude 15 mm. The analyser should be hung into the upper elongated holes and lowered until the rear part of the housing touches the rack. Then the lower screws are inserted and all screws fastened.

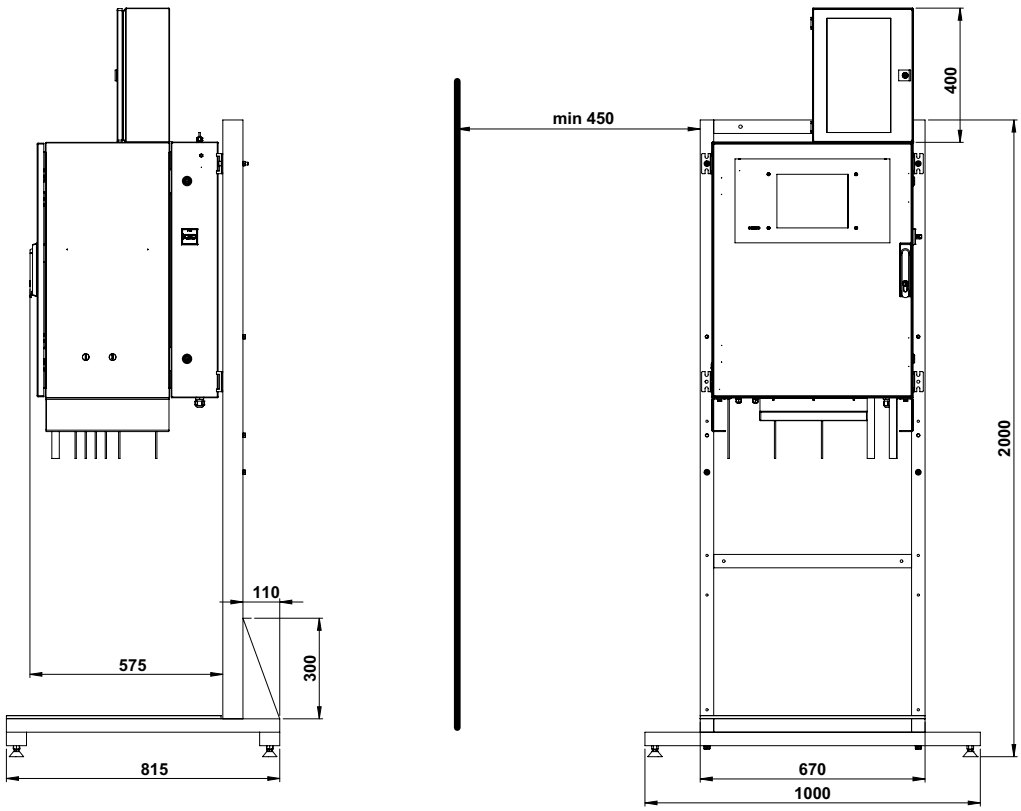

Fig. 50: NitriTox® on mounting rack

8.3 Removing transportation locks

The transportation locks are necessary for the safe transport of the analyser and have to be removed before starting up the analyser.
Table 7, page 90 ff. gives an overview of the locks and explains how to remove them:

Table 7: Transportation lock

Lock	Removing approach	Figure
Circuit breaker lock	Do not switch on the analyser without LAR technical support or a person that is authorized by LAR. Otherwise, the warranty is invalid. Cut the cable tie and slide the lock out down. Press the metal clamp between thumb and forefinger and remove it.	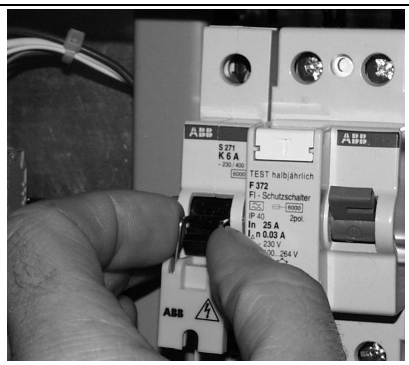 **Fig. 51: Remove the lock**
pH sensor cable lock	The cable is packed in a bubble wrap and fixed on the parting plane. Remove the bubble wrap and install the cable with the pH sensor.	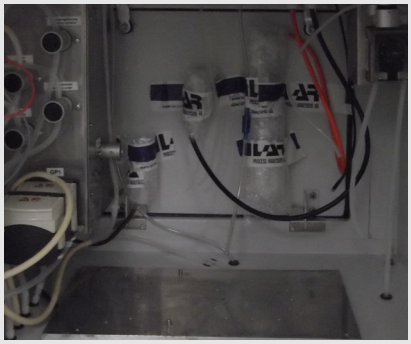 **Fig. 52: Parting plane**
O2 sensor lock	The sensor is packed in a bubble wrap and fixed on the parting plane. Remove the bubble wrap and install the sensor in the measurement cell.	
Cable for heat/cool transfer mechanism	The cable is packed in a bubble wrap and fixed on the parting plane. Remove the bubble wrap and install the cable with the heat/cool transfer mechanism.	

8.4 Connections

8.4.1 Main electrical connection

8.4.1.1 Analyser's power connection

A power cable has to be provided by the customer.
Fig. 53: shows the mounting panel, placed on the back wall of the housing from the inside.

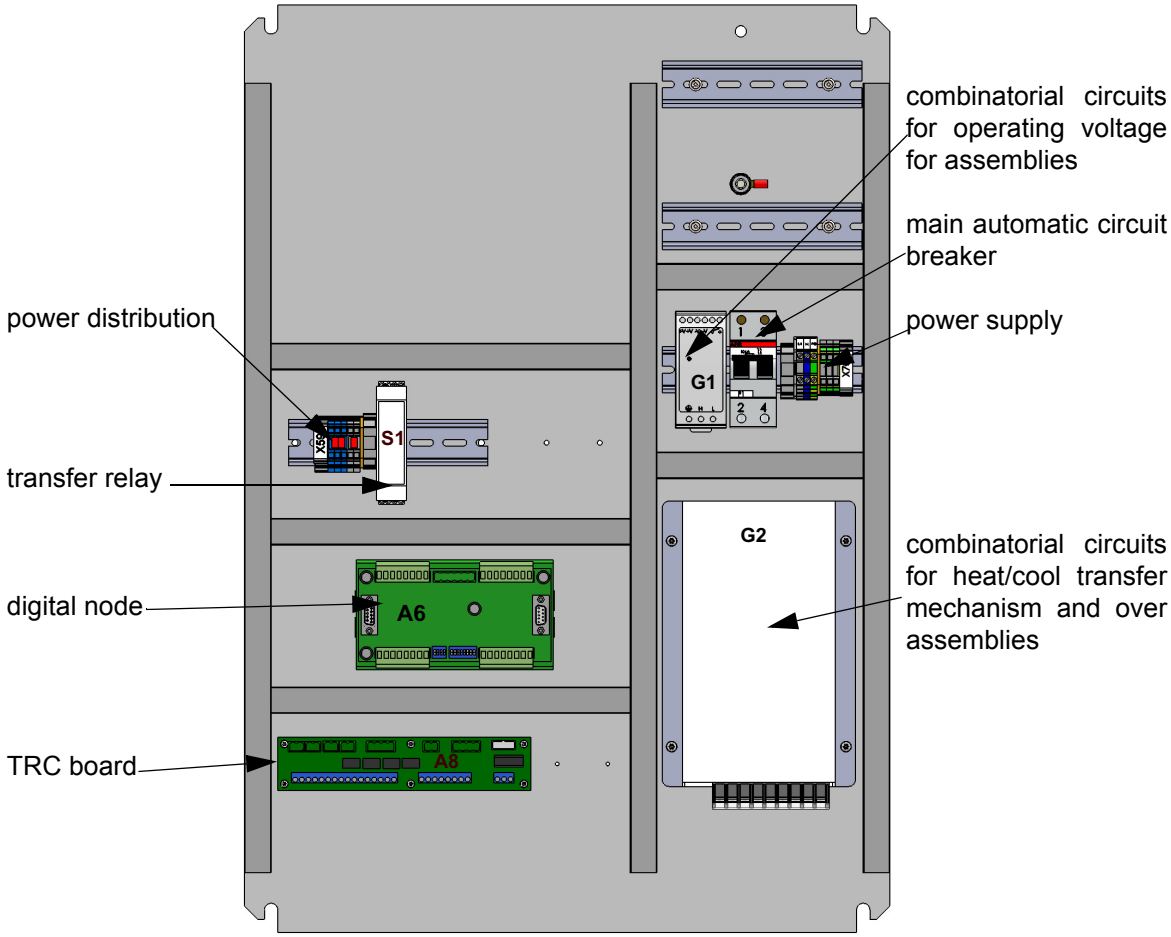

Fig. 53: Mounting panel

Note:
Please check the local power supply meets the requirements in accordance with the label on your analyser before switching the analyser on.
If the voltage is not correct, please contact **LAR technical support (chapter 10.2, page 111)**.

8.4.2 Electrical connections

Caution:
Make sure main power supply is OFF before starting to wire the system! Do not switch on the toximeter without LAR technical support or a person that is authorized by LAR. Otherwise, the warranty is invalid!

8.4.2.1 Connecting electrical wires - TRC board

The NitrTox® is equipped with a terminal board (TRC board) which serves as an interface for the device to communicate externally. The board is located in the lower part of the housing on the back wall (Fig. 53:, page 91) To get access to the board, open the electrical housing.

Note:
The TRC board is displayed here as built in the analyser (upside-down).

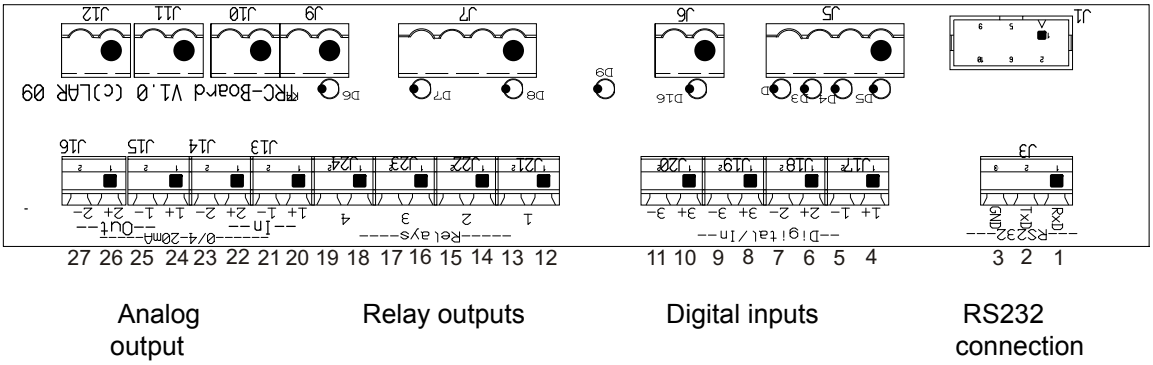

Fig. 54: External communication

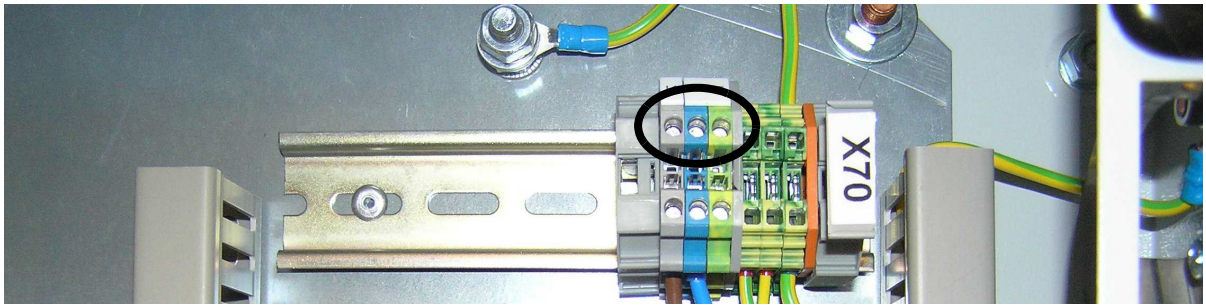

Fig. 55: Power supply connection

Table 8: Connections at TRC board

Connection	Function	Usage
RS232		
1	RXD	used by customer and technical support
2	TXD	used by customer and technical support
3	GND	used by customer and technical support
Digital inputs		
4	1+	used by customer (remote control)
5	1-	used by customer (remote control)
6	2+	fluid sensor
7	2-	fluid sensor
8	3+	fluid sensor

Table 8: Connections at TRC board

Connection	Function	Usage
9	3-	fluid sensor
10	4+	used by customer for extern error messages
11	4-	used by customer for extern error messages
Relays		
12	1a	programmable
13	1b	programmable
14	2a	programmable
15	2b	programmable
16	3a	programmable
17	3b	programmable
18	4a	programmable
19	4b	programmable
Analog outputs (0/4 - 20mA)		
24	1+	not used
25	1-	not used
26	2+	measured value
27	2-	measured value

8.4.2.1.1 Digital Input Line

The analyser can be controlled by digital input. If a sample is present, this option enables the user, for instance, to start a measurement.
A DC voltage, at the digital input, indicates the status of the sample line:

Table 9: Digital input of the applied DC voltage

0 – 3 V	No sample present
12 – 24 V	Sample present

8.4.2.2 Relays

The analyser contains four isolated relays (switch contacts). These are capable of switching external circuits of up to 24 V AC/DC with 1 A AC/DC. They can be assigned to operators within the analyser operating software. They also may be used to either “make or break contact“ (software adjustable, default behaviour is “make contact“).

8.4.2.3 Analog output line

The isolated 0/4 – 20 mA current loop is capable of driving loads up to 500 Ohm. The type of the analog output (0 – 20 mA or 4 – 20 mA current loop) is set by “analog out calibration“ in level II. If set to 4 – 20 mA a so-called life-zero feature may be initiated in the operating software meaning that instrument failures are assigned to the 0 mA level. The conditions for the failure indication can be individually programmed with the operating software.

8.4.2.4 Serial interface RS232

The serial port serves to transfer the current data string to a computer which is connected to the NitrTox® with a RS232 cable.
On the computer, a standard terminal software (e.g. Windows) can be used. Adjust the serial interface parameter as follows:

Table 10: Serial interface parameter

Function	Default
Baud rate	9600 Bd
Parity	none
Data bits	8
Stop bits	1
Protocol	Xon/Xoff

If you send a letter D, the toxicity analyser answers by transferring the current data string according to the following format :

Date;Time;MeasurementScreen1;MeasurementScreen2;Status respectively

The date is transmitted in the format DD.MM.YYYY;hh.mm.ss; and all other data in the format @@@@@@.@@ (always 6 digits before the decimal point and 2 after the decimal point, digits which are not used are being filled with zeros). The status is transmitted in the format e.g., "E31_M1", "E4124_E1990_P", "L1_toxicity_L2_dosing" or "E1870_L1_toxicity_M1" (the underlines here and in the following represent blank space characters).

Different activities are able to be performed in the status ring (table 3, page 60). The maximum length of the character string is 4095.

8.4.3 Installation of individual components

8.4.3.1 Measurement cell

The small stirrer bar (20x6mm) is inserted into the measuring cell.

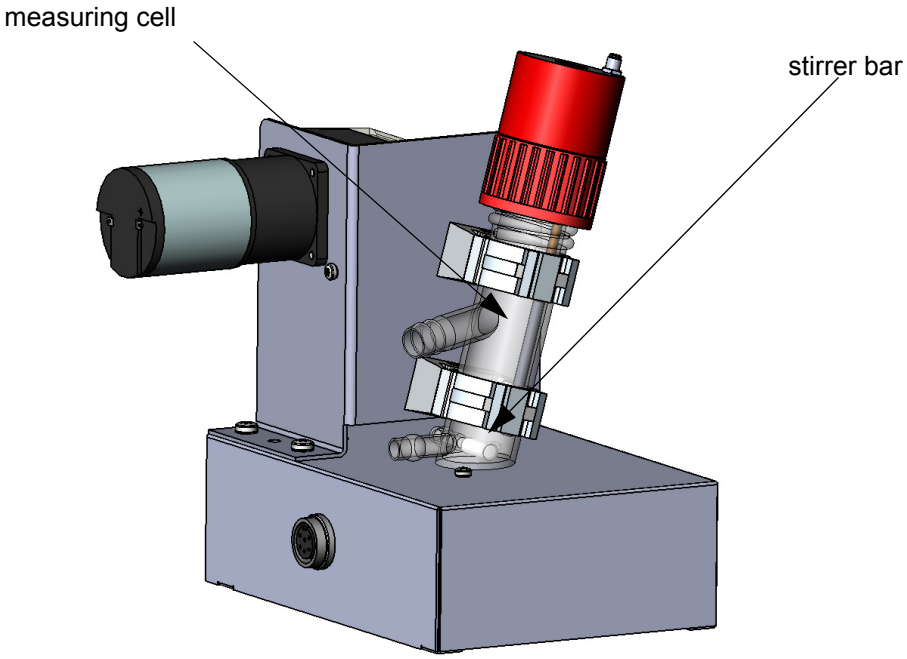

Fig. 56: Measuring Cell with small stirrer bar

8.4.3.2 Oxygen sensor

For transport, the sensor is removed from the measuring cell and fixed with bubble wrap on the parting plane.

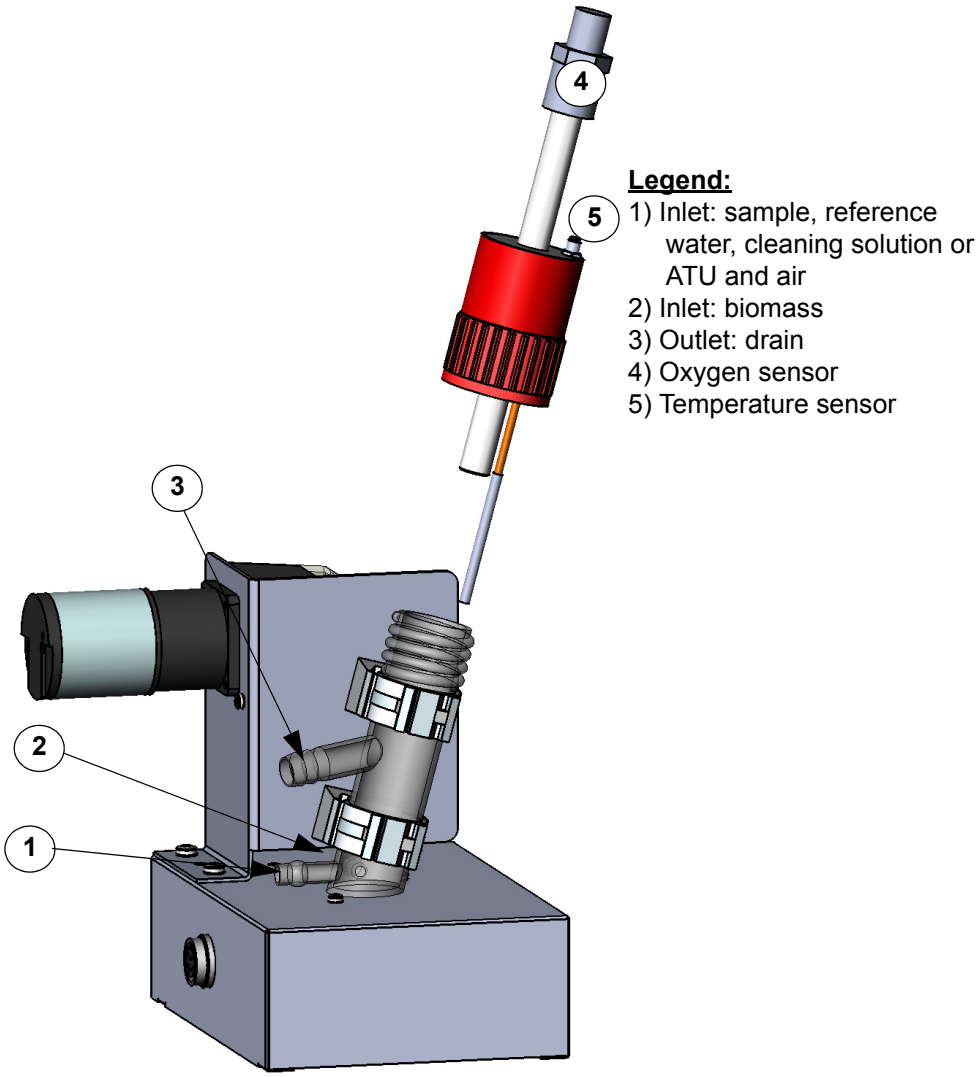

Fig. 57: Correct position of the screw joint (oxygen sensor) in the measuring cell

8.4.3.3 Lid of fermentation vessel

For transport the pH sensor is removed from the fermenter lid.
The pH sensor has to be put into the hole of the lid of the fermentation vessel (see no. 1 in Fig. 58:).

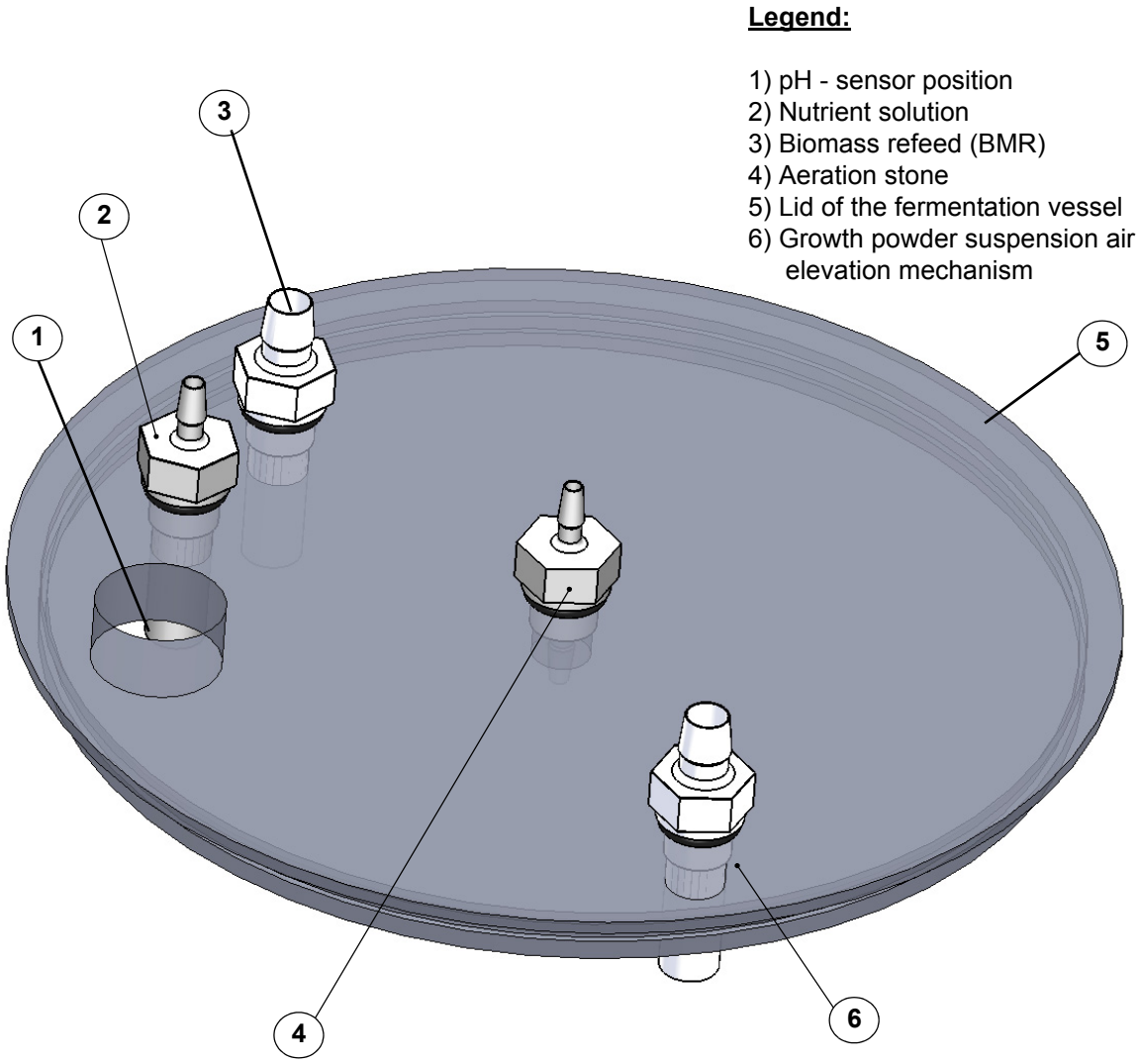

Fig. 58: Connection in the lid of the fermentation vessel

8.4.3.4 Aeration of the fermentation vessel and position of the BMR

The aeration of the fermentation vessel is important for the optimal growing of the nitrifier culture. It is realized by air supply with four connectors in the ground level of the fermenter and an aeration stone. The holes are radially allocated (Fig. 59:). The four connectors have each Ø 0,6 mm drill-hole.

The biomass refeed is placed right from the fermentation vessel. The BMR unit collects overflow of the biomass, as due to the continuous dosing of nutrient solution and growth powder there is an overflow of liquid and biomass. The BMR unit is able to push valuable biomass back into the fermenter vessel on a regular base.

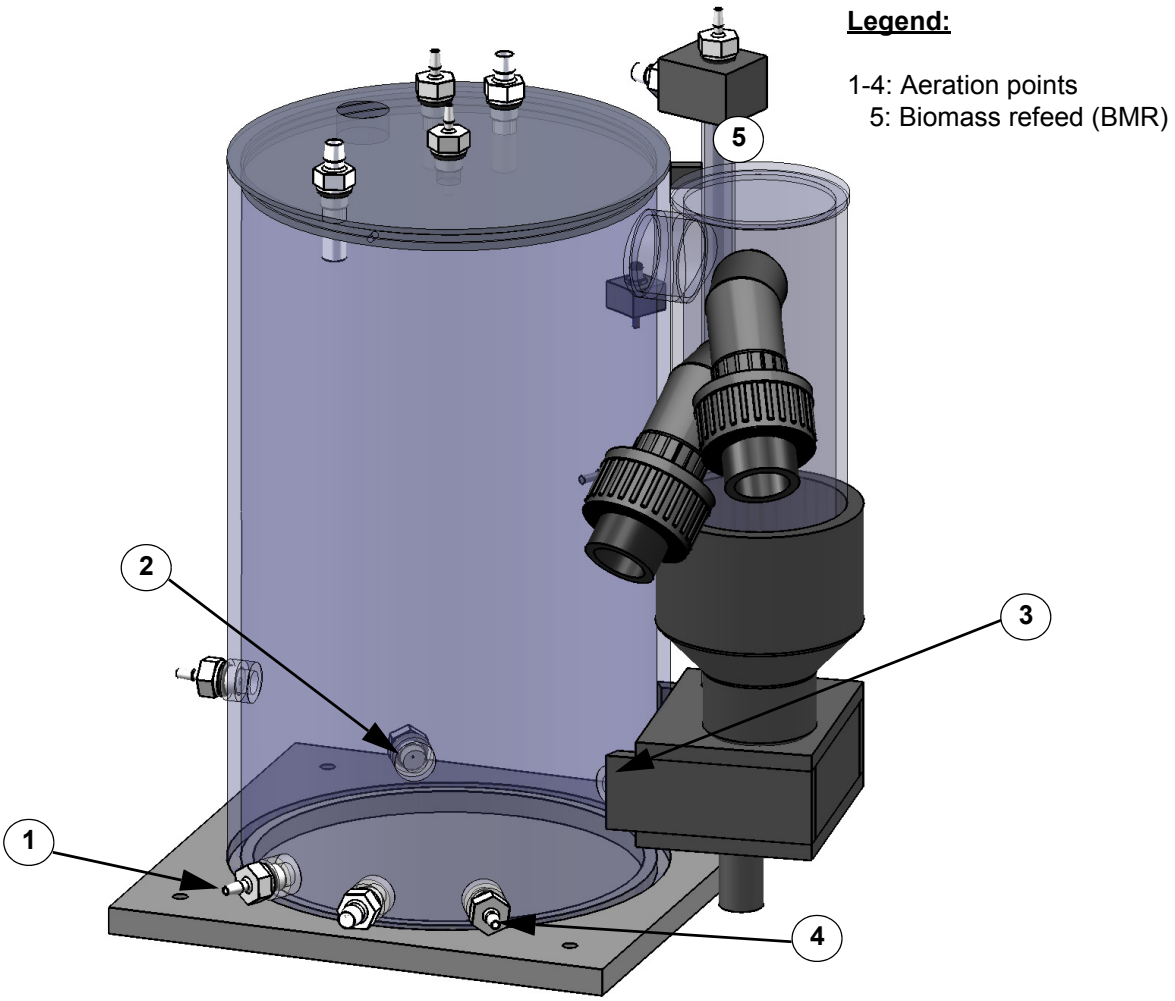

Fig. 59: Installation aeration of the fermentation vessel

8.4.3.5 Aeration stone and filterballs

One aeration stone and ten filterballs are placed in the fermentation vessel. The objective of those objects is that the biomass is exposed to enough aeration for the nitrifying bacteria to exist and move.

The aeration stone in the fermenter is the same as for the reference water container. The filterballs will move in the same container as the nitrifying bacteria (fermenter vessel). The filterballs a brought into contact with the nitrifiers by LAR approximately 1 week before delivering in order to prepare them for installation.

For the transport, the aeration stone is dismounted from the fermenter vessel lid. After the nirtrifying bacteria are inside of the fermenter vessel with the filterballs, the aeration stone can be put in the fermentation vessel lid.

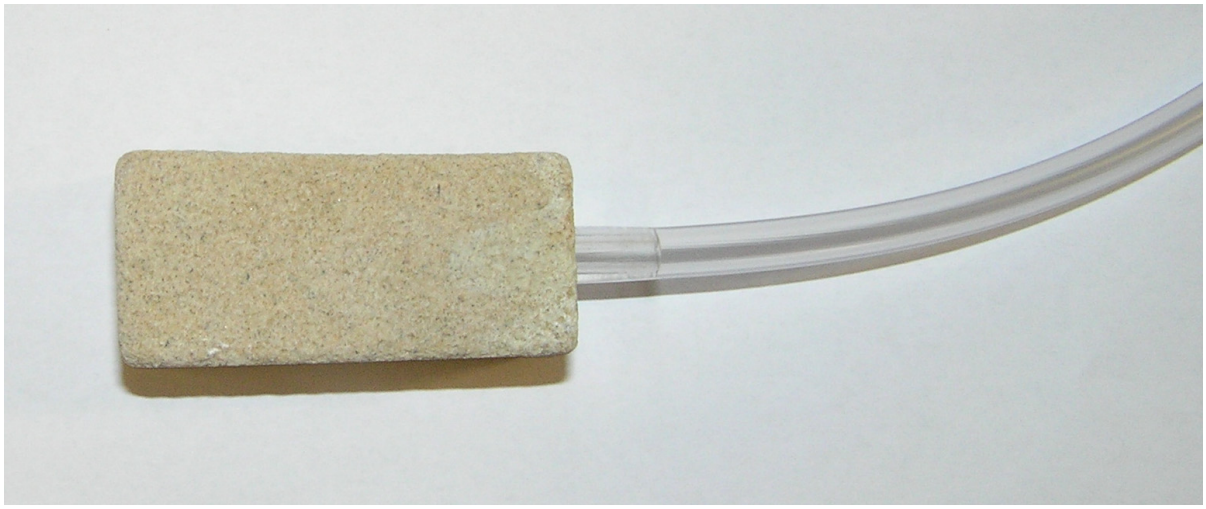

Fig. 60: Aeration stone

Fig. 61: Filterballs

8.4.3.6 Growth powder unit

The nutrient solution and growth powder must be constantly added into the fermentation vessel, to ensure a continuous breeding from the nitrifying bacteria. The growth powder unit is placed on the top of the analyser. The dosing of the growth powder solution is controlled by the software. One time per day the solution gets into the fermentation vessel for 5 sec (chapter 4.4.2 on page 28). The preparation of growth powder solution is described in chapter 3.2.4 on page 9.

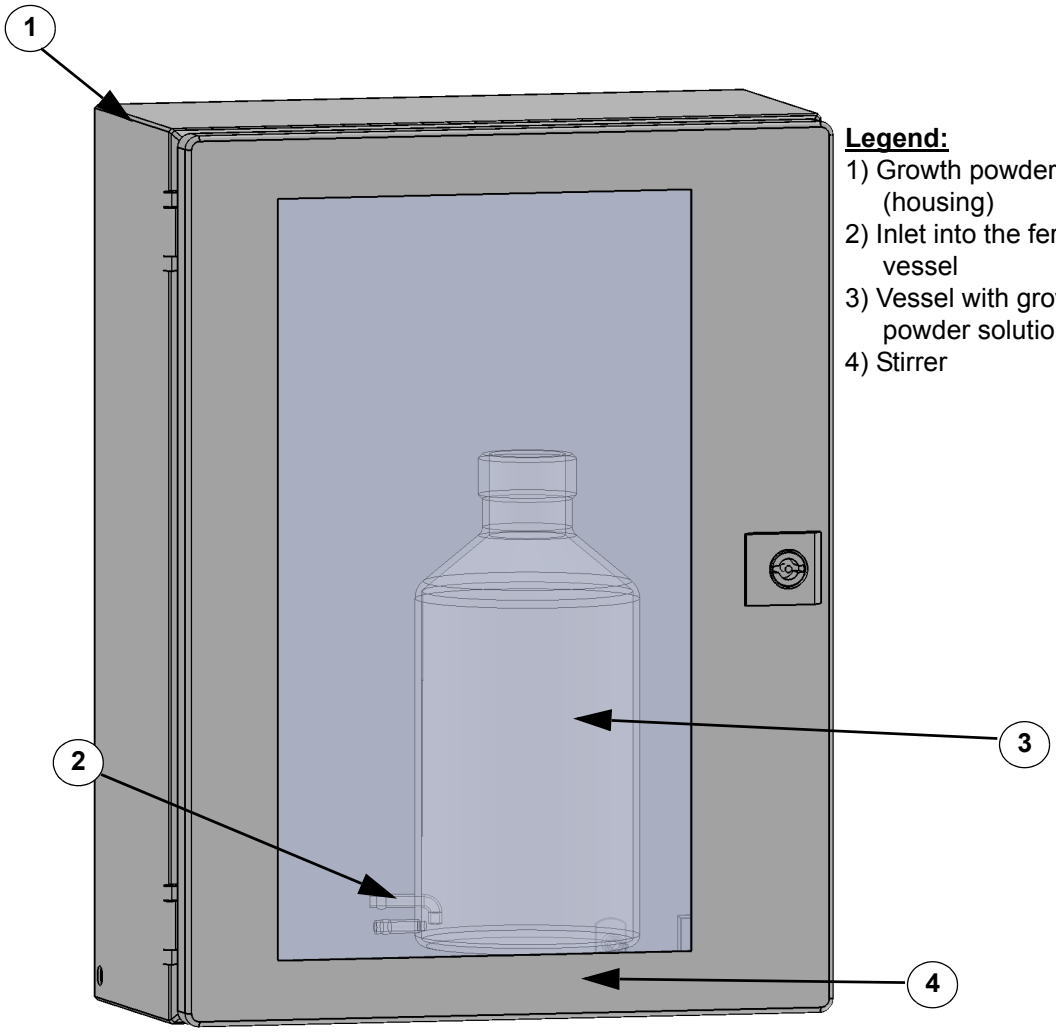

Legend:
1) Growth powder unit (housing)
2) Inlet into the fermentation vessel
3) Vessel with growth powder solution
4) Stirrer

Fig. 62: Growth powder unit

9 Accessories and Optional

The options for the NitriTox® are:

- FlowSampler®
- External aeration vessel
- Activated carbon cartridge for aeration
- mounting rack and
- FlowSampler®, external aeration vessel, activates carbon cartridge

9.1 FlowSampler®

The FlowSampler® is a patented sampling device by LAR which does not require filtration steps because the sample is siphoned off in the center of the sample stream towards the main flow direction of the water. Therefore no big particles can get into the sample stream. The sample enters the system without adulteration because smaller particles are collected. The FlowSampler® can handle even difficult challenges like the sampling at the inlet of a sewage treatment plant or before the raw rack.

The FlowSampler® by LAR will be installed next to the analytical device (p.e. at a wall).

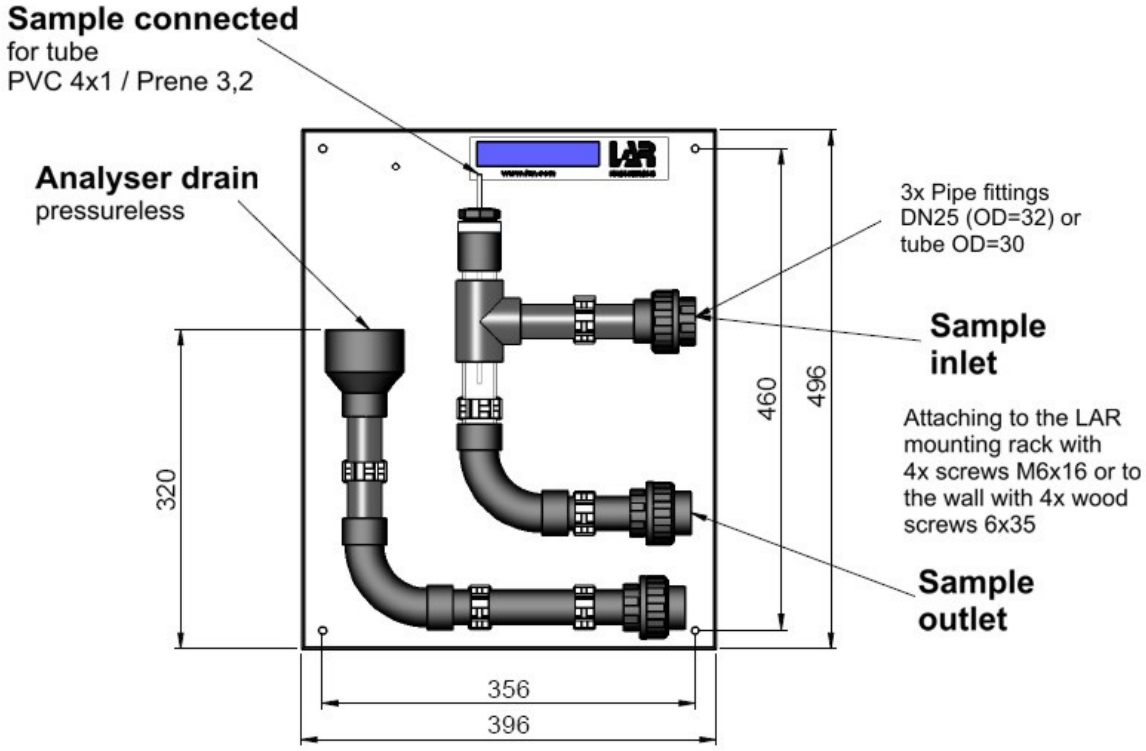

Fig. 63: FlowSampler®

The sampling device FlowSampler requires a **flow** of 2-5 m³/h (max. 10 m³/h) and at a max. counter pressure of <0.2 bar at the sampling tube of the FlowSampler (Di = 3). The temperature of the sample should be less than 50 °C. For **sample temperatures** up to 90°C, a special PP version of the FlowSampler is available.

The **connection** of the FlowSampler can be realized as a PVC tube screwing of 32 mm (external) or as tube connection for a pressure hose with 30 mm internal diameter. For the sample drain the same dimension are valid.

The **sample dosing** can be done by an immersion pump which may require a cutting device, depending on sample composition. The pump should has to guarantee the necessary flow of 2-5 m^3/h (max. 10 m^3/h) over the bridged distance.

9.1.1 Putting into operation

1) Establishing all connections
2) Open the flow (sample inlet)

9.1.2 Maintenance

Please see chapter 5.3, page 66 ff. for the maintenance work.

9.2 External aeration vessel

Some samples of different applications may contain a very low amount of oxygen, so that it might be necessary to aerate the sample before entering the analyser. Therefore, the sample can be aerated additionally to the normal aeration within the measurement cell. The additional aeration vessel is placed at the left wall of the device. The additional aeration can be activated or deactivated in the measurement parameters (see chapter 4.4.2, page 28 ff.).

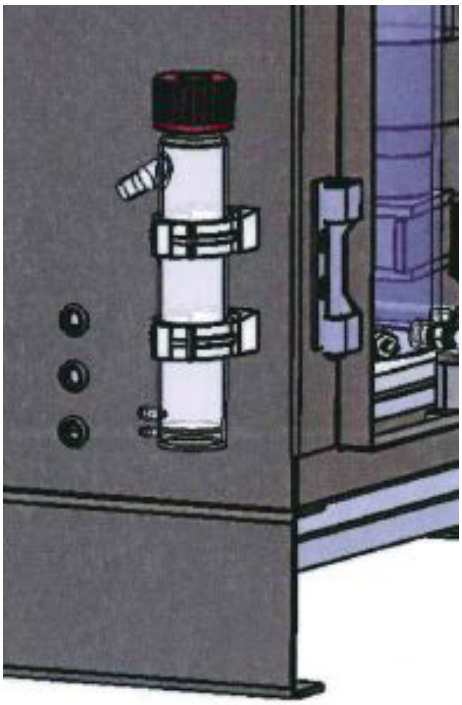

Fig. 64: External aeration vessel

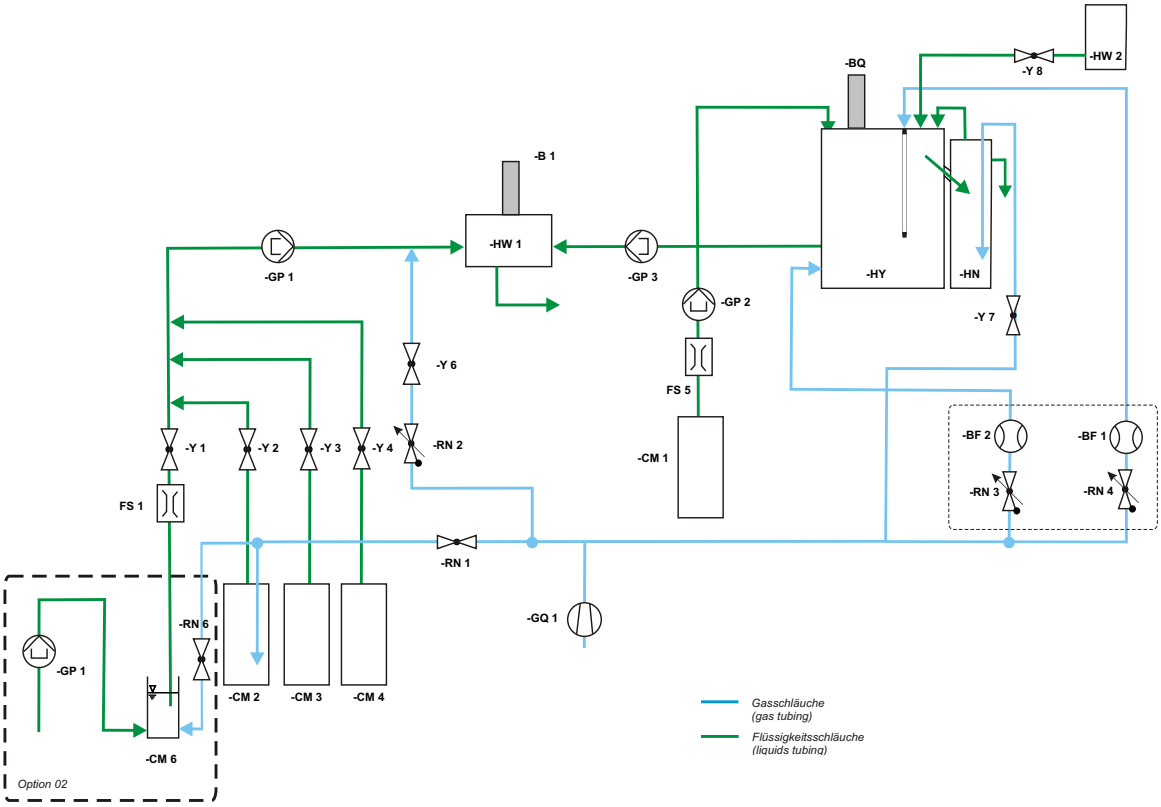

Fig. 65: Flow diagram with external aeration vessel

Table 11: Key of the flow diagram

Short	Description
B	Oxygen sensor
BF	Flow sensor
BQ	pH sensor
CM	Solution vessel
GP	Pump
FS	Fluid sensor
GQ	Air pump
HN	Biomass Refeed (BMR)
HW 1	Measurement cell
HW 2	Growth powder unit
HY	Fermentation vessel
RN	Critical nozzle / choke
Y	Valve

9.2.1 Maintenance and service

9.2.1.1 Pump and tubes

Please see chapter 5, page 63 ff. for instruction for maintenance task.

9.2.1.2 Cleaning aeration vessel (monthly)

If you want to carry out this maintenance in addition to planned standard maintenance, please first terminate possible ongoing measurements with the red “offline“ button (chapter 4.5.3, page 57 ff.).
The aeration vessel needs to be cleaned monthly or depending on how contaminated it is. To do this, the whole vessel can be taken out. Pull off the tubes and then the caps of the vessels are taken off. The vessels can be cleaned using a bottle brush. After cleaning, the vessels should be rinsed with 200ml ultrapure water.
After cleaning, the vessel can be put back and the tubes can be reconnected.

9.3 Activated carbon cartridge for aeration

In some applications, corrosive and hazardous ambient conditions have to be expected. For these applications, LAR AG recommends to use the activated carbon cartridge for filtering the air before it is used to aerate the biomass in the fermenter. The cartridge is placed at the left wall of the analyer housing.

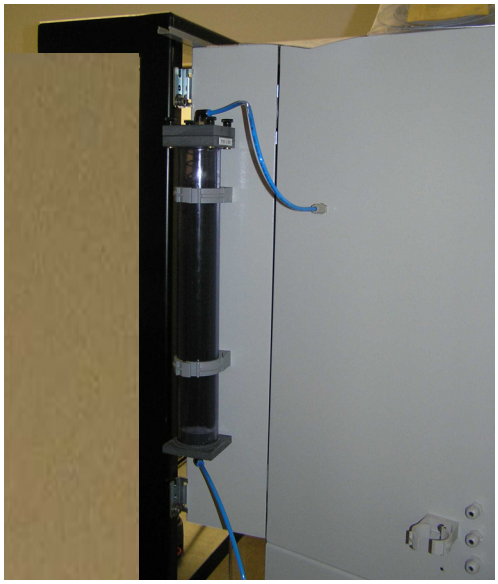

Fig. 66: Activated carbon cartridge on the left wall

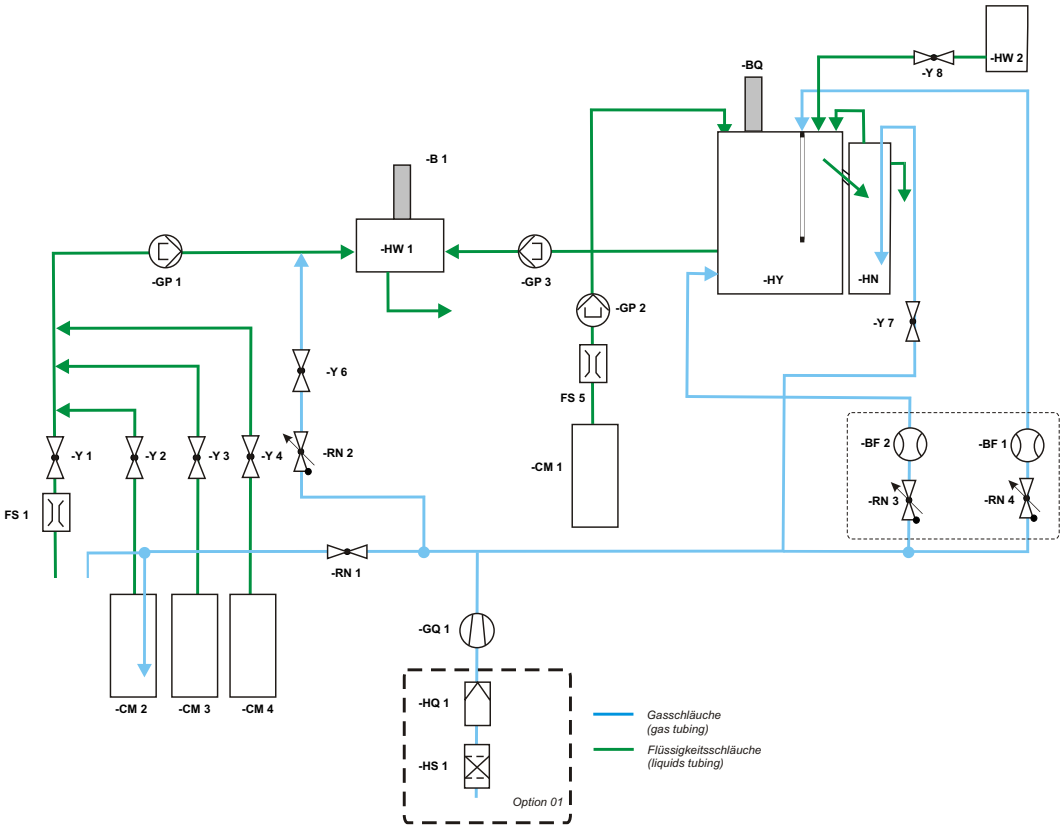

Fig. 67: Flow diagram with activated carbon cartridge

9.3.1 Maintenance and service

9.3.1.1 Replacing activated carbon (6 month interval)

If you want to carry out this maintenance in addition to planned standard maintenance, please first terminate possible ongoing measurements with the red “offline“ button (chapter 4.5.3, page 57 ff.).
In order to replace the activated carbon pellets, the upper and the lower tubing of the cartridge need to be removed. Then, the cartridge can be taken out. The pipe clamps can be opened with a screwdriver.

- The cartridge can be opened from the top. Be careful doing this, because there is a spring in the cartridge.
- Lid, O-ring, filter mat, sieve and spring need to be put aside.
- Dispose used pellets.
- Fill the cartridge with the new pellets. There needs to be space for the spring to bet set.
- Put filter mat, sieve, spring and **O-ring in the guidance** on top of the pellets.
- Screw the lid on top.
- Put the cartridge back in the mounting.
- Reattach the tubes back to the cartridge.

Note:
Please note the safety regulations when handling corrosive substances. Gloves and glasses are to be worn at all times in order to avoid acid burns and other potential risks. In the case of dust formation, a respirator mask should be worn.

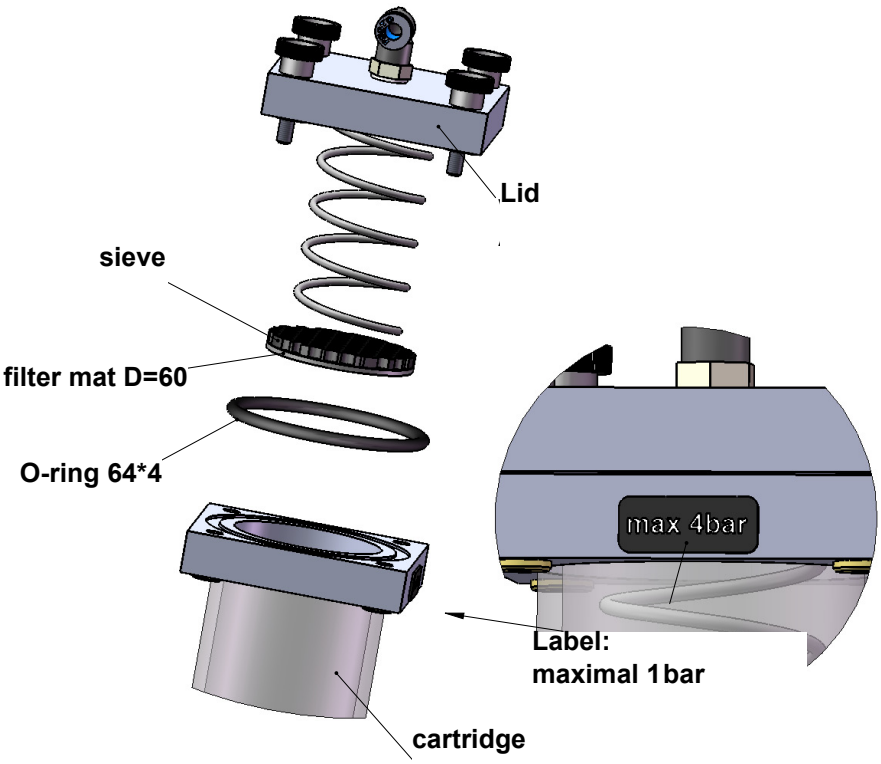

Fig. 68: Activated carbon cartridge (exploded view)

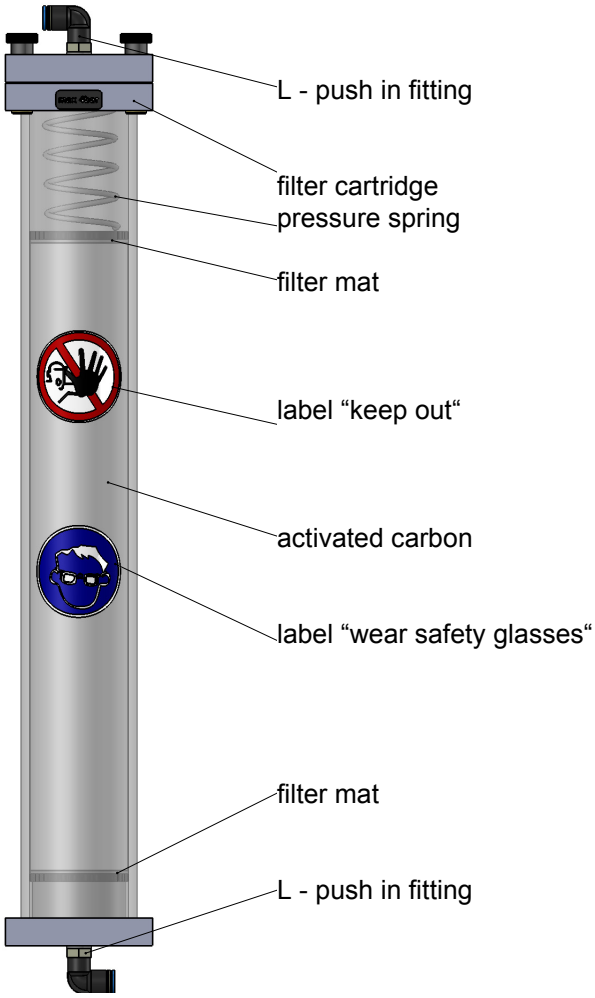

Fig. 69: Activated carbon cartridge

9.3.1.2 Replacing air filter (3 month)

The air filter is for the protection of the compressor to avoid pollution by for example dust.
If you want to carry out this maintenance in addition to planned standard maintenance, please first terminate possible ongoing measurements with the red “offline“ button (chapter 4.5.3, page 57 ff.).
The filter is located behind the front panel. Open the rear house. Having done so, the tube connections of the old filter can be pulled off. Then the new filter can be connected to the tubes. Once, the filter has been replaced, the rear house can be closed.

Fig. 70: Filter

10 Technical Information

Note:
Rights remain reserved to matter of changes for technical improvements.

10.1 Technical data

Table 12: Specifications

Item	Dimension/description
Housing	lacquered steel sheet (IP54)
Dimensions	762 * 600 * 575 mm (H*W*D)
Weight	approx. 70 kg
Power supply	230 / 115 V 50 / 60 Hz
Power input	max. 370 W
Fuses	internal circuit breakers
Signal output	Analog output, Note: the analog output is galvanically isolated to the housing. 0-20mA or 4-20mA with incorporated "life zero" feature Load 500 Ohm
Interfaces	Serial interface RS 232 for remote control
Potential-free contacts:	4 programmable relays Voltage: 24 V=, 24 V~ Current: 1 A=, 1 A~ Make or break contact
USB interface	USB 2.0
Display	10,4“ - screen, resistive TFT display (touch display)

10.2 LAR contact

Table 13: LAR contact

Contact Name	Telefone Number	E-Mail Adresse
Technical Support	+49 30 278958 - 55	service@lar.com
Export	+49 30 278958 - 43	export@lar.com

10.3 Site

Table 14: Site conditions

Side condition	Requirements
Ambient conditions	Temperature > 5 °C, max 35 °C, humidity <= 80%
Mounting rack dimensions	2000 x 1000 x 815 mm (H x W x D); weight of rack: 65 kg
FlowSampler® (optional) dimensions	Carrier panel: 500 x 400 x 120mm (H x W x D)

11 Flow Diagrams

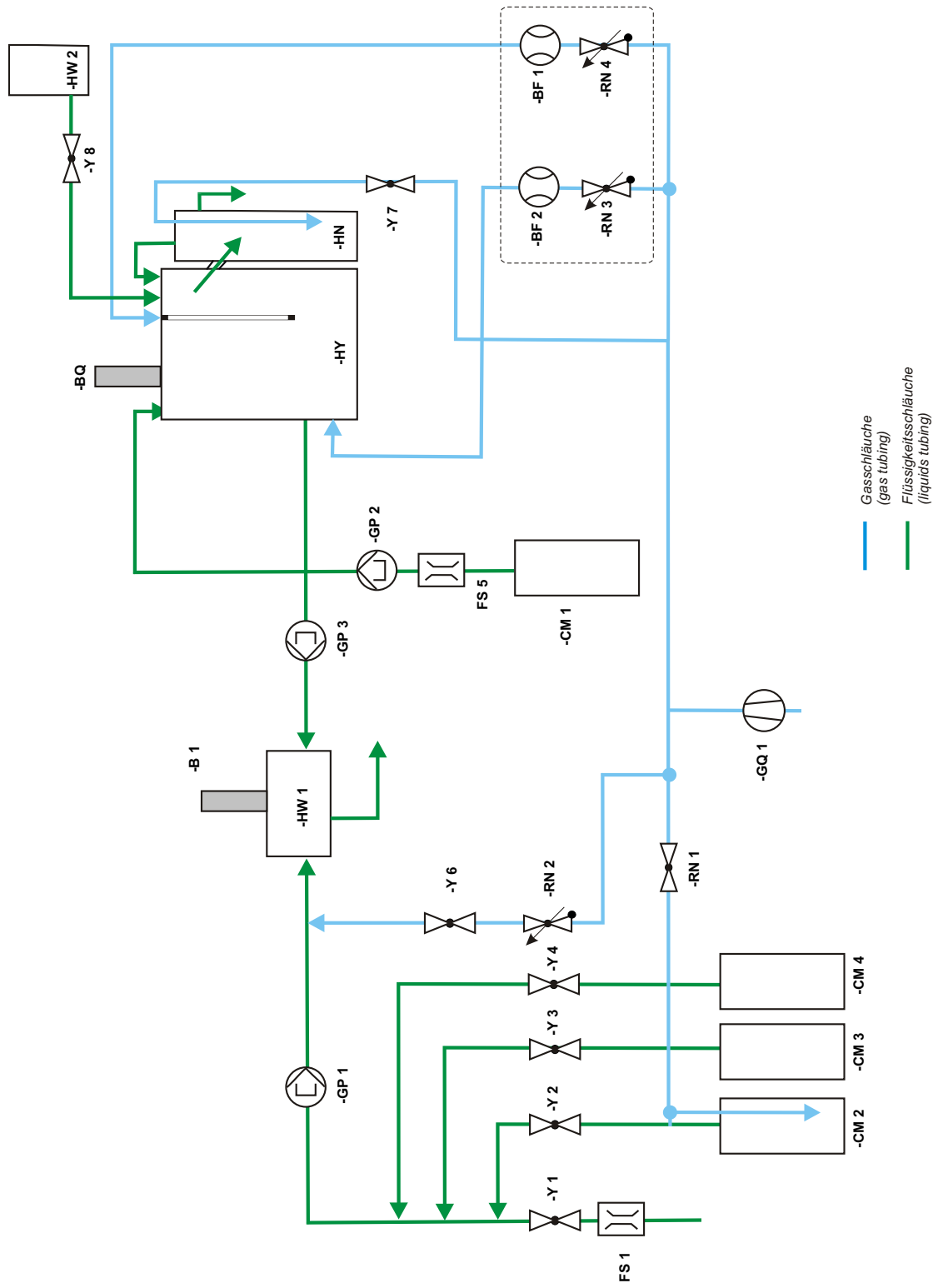

Fig. 71: NitriTox®

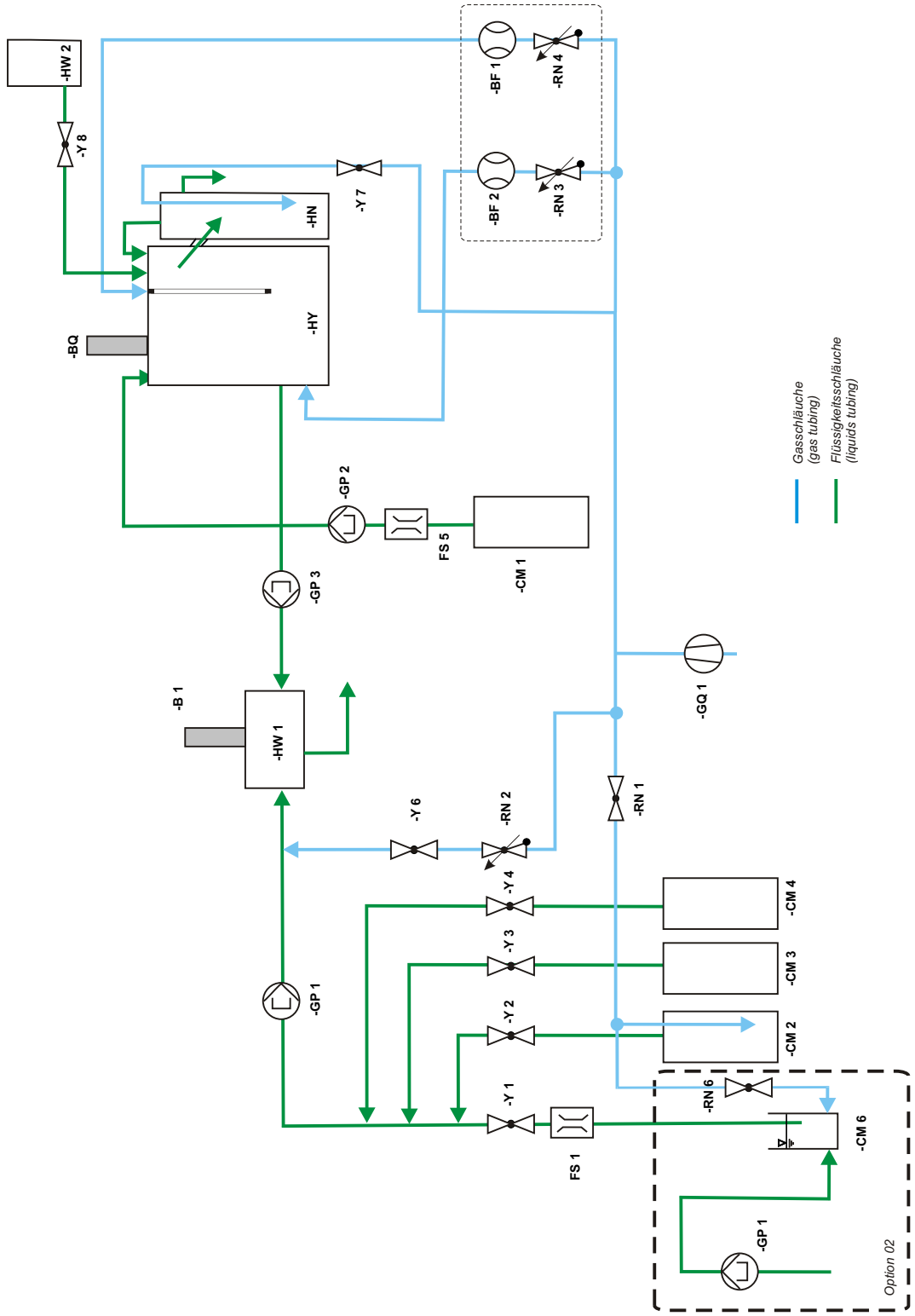

Fig. 72: NitriTox® with external aeration vessel

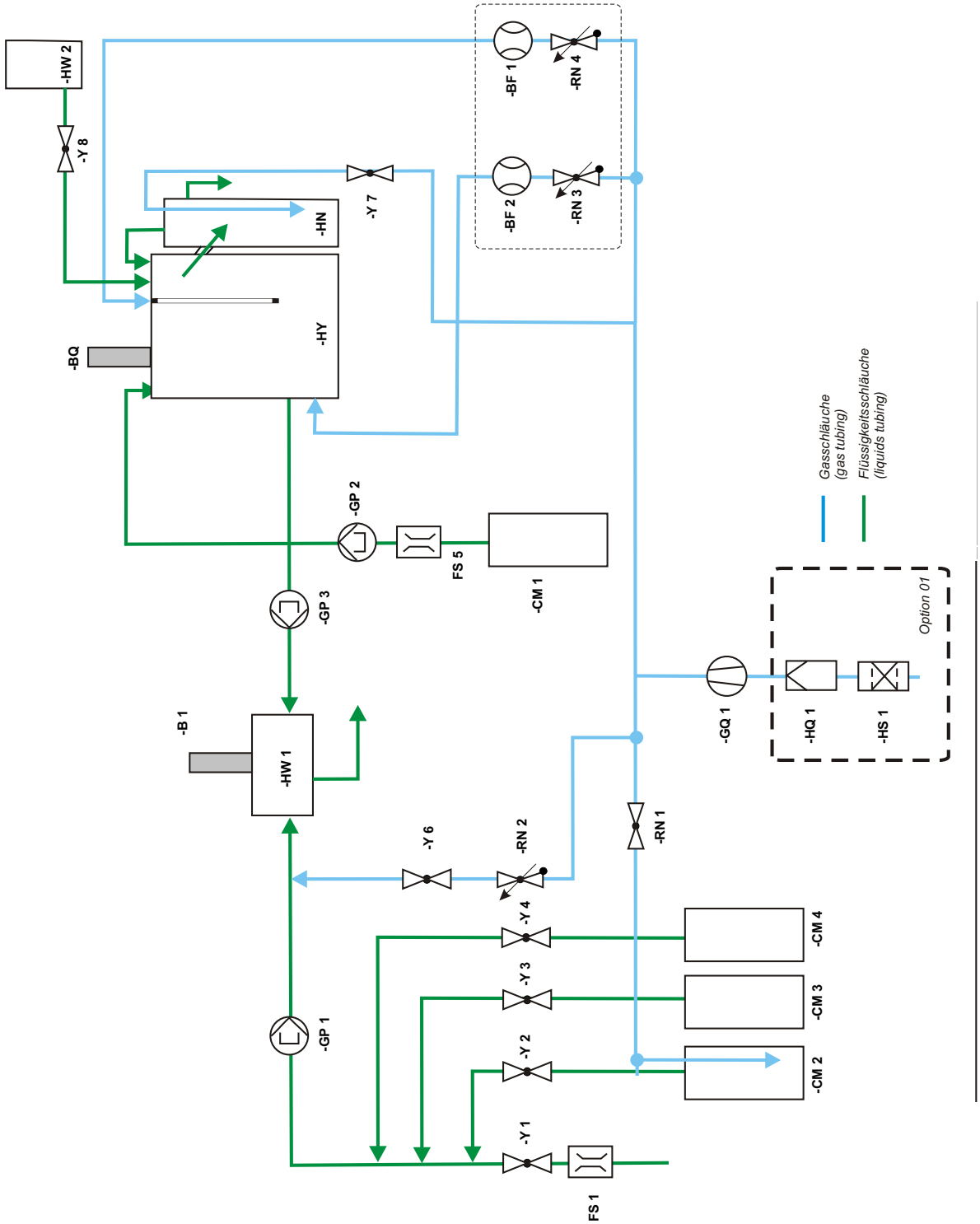

Fig. 73: NitriTox® with activated carbon cartridge

12 Operators Log

Betriebstagebuch / Operators Log

Seite / Page		Betreuer / Organiser		Vertreter / Deputy		Gerätenummer / Device Number	

Datum / Date	Anfang / Start	Ende / End	Zeit / Time	Störung / Trouble		Behebung / Action	Wartung / Service		Betriebsbereit / Ready		Unterschrift / Signature
				Vorkommen / Occur	Fehlernr. / Error		Firma / Company	LAR	Ja / Yes	Nein / NO	

13 Level III: For Trained Users Only

13.1 Operating levels

In addition to the two operating levels mentioned in the previous chapters, there is a further operating level. This third level is only accessible with a specific USB stick. Furthermore, some parameters in level II are also accessible for level III users:

- Measurement parameters
- PC settings
- Analog out calibration
- Signal curve

Note:
Level III and the necessary USB stick is only granted after a technical training with LAR. To do so please contact **LAR technical support (chapter 10.2 on page 111).**

13.2 Operating level III

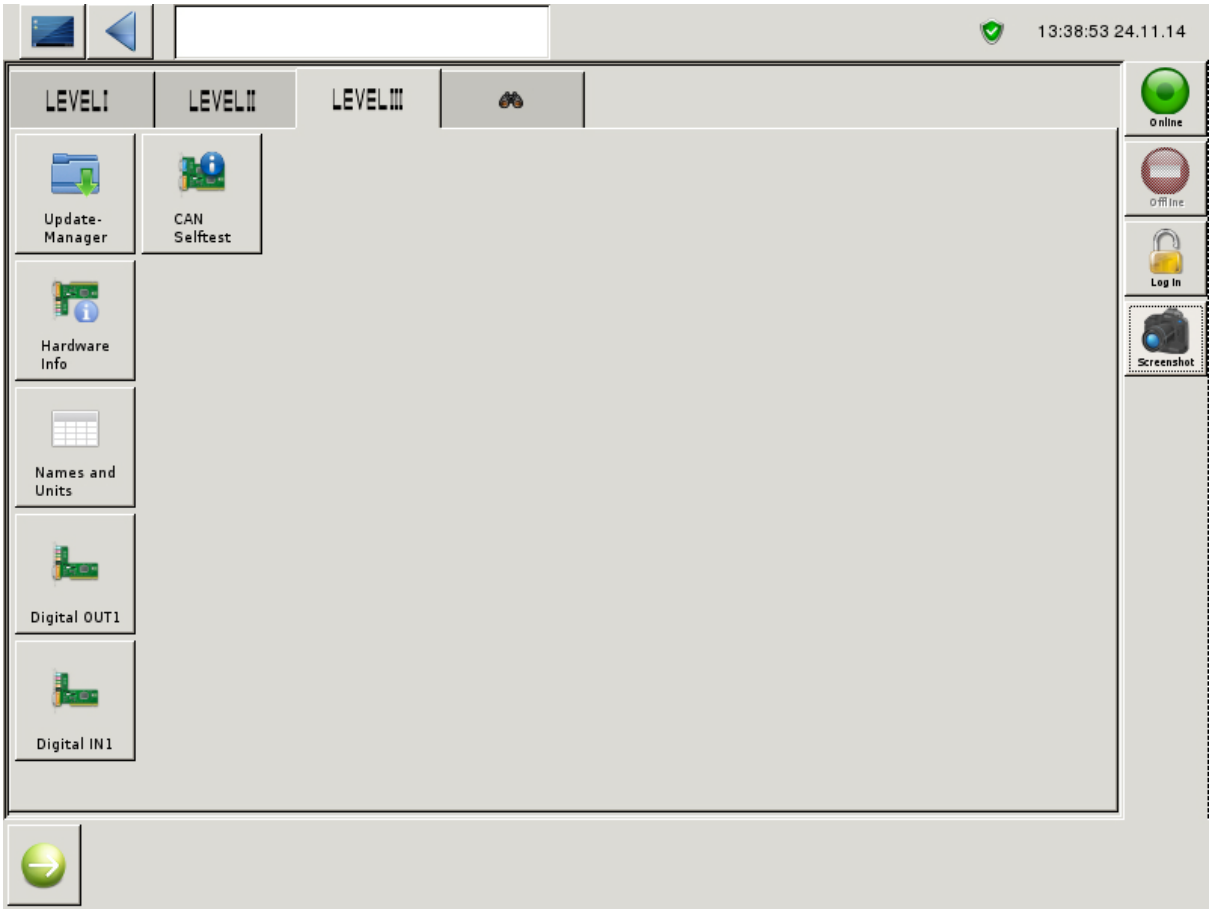

Fig. 74: Operating level III

13.2.1 Measurement Parameters (Level II)

Additional to user level II, the user level III can set this parameter:
Amount of sample in measurement phase I (chapter 4.4.2.8 on page 30)

Note:
If a dilution from the sample should be done, the parameter “calculate amount of sample in measurement phase 1“ must be activated (YES). For this setting please contact the **LAR technical support (chapter 10.2, page 111)**.

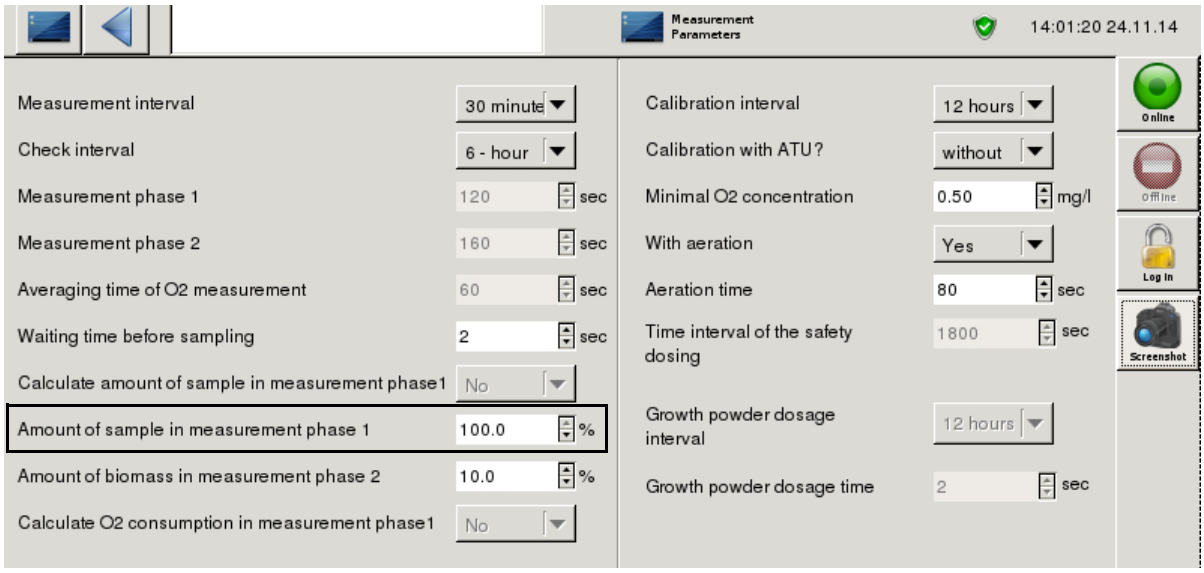

Fig. 75: Measurement parameter screen in level II as a user III (example)

13.2.2 PC settings (Level II)

On this screen, in level II, the user (in level III) can change three further parameters that the level II user cannot change:

- Activate or deactivate the password for level II
- Drag and drop function
- Network

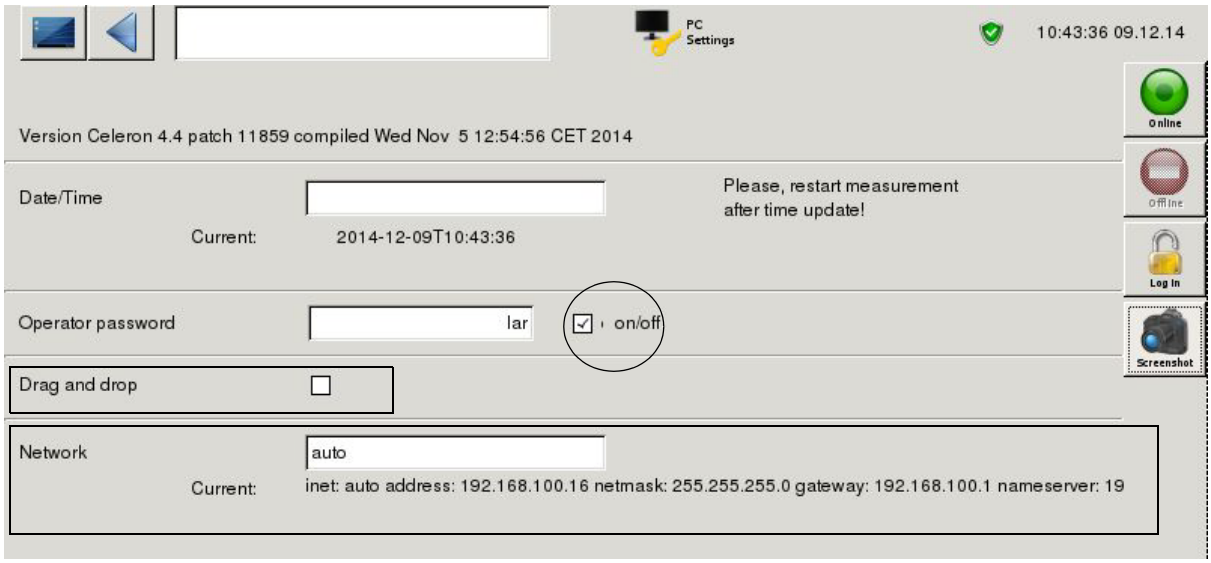

Fig. 76: PC setting in level II as a user III (example)

13.2.2.1 Activate and deactivate the password

The level III user has the possibility to activate and deactivate the password. The default is activated. If the status is changed, the adjustment must be saved with the “floppy disc“. If the password is deactivated, the entrance to level II is then only possible with the access stick. The default password is: **lar**.

13.2.2.2 Drag and Drop

On this screen, it is also possible to turn the drag and drop function on or off. The function enables icons (buttons) to be moved from location to location (higher level to lower levels) and hence, to provide users of other levels with certain functions.

13.2.2.3 Network

„Current“ shows the current IP - address of the analyser. The user can put in “his“ network manually. The entry must be in accordance with the example below. Blank space characters are represented by underlines. The word “auto“ can be written in. That mean the software will find automatically the IP - address.
If more information is needed, please contact **LAR technical support (chapter 10.1 on page 111).**

entry (example):

inet:_static_address:_10.0.2.15_netmask:_255.255.255.0_gateway:_10.0.2.1_nameserver:_10.0.2.1

13.2.3 Analog out calibration (Level II)

The validation of analog outputs can be performed with multimeter directly at the analog output node or its connected terminal connector.
Before checking the analog outputs make sure the analyser is in offline mode and no measurement is performed.
Testing:

- Select analog out number calibration: in NitriTox® there is only one analog output (Analog OUT1)
- Select “0-20 mA“ under life zero
- Select button “0 mA“ and activate button “default 0“→ measured value (on multimeter) should be 0 ± 0.03 mA or adjust to the correct value under “change of digits”
- Select button “20 mA“ and activate button “default 20“ → the measured value (on multimeter) should be 20 ± 0.03 mA or adjust to the correct value under “change of digits”
- Subsequently start output of test signals with 0, 4, 10, 12 and 20 mA, using the respective buttons.
- After completion of analog output tests and calibrations select and store the respective output signal 0/20 mA or 4/20 mA under point “life zero“.

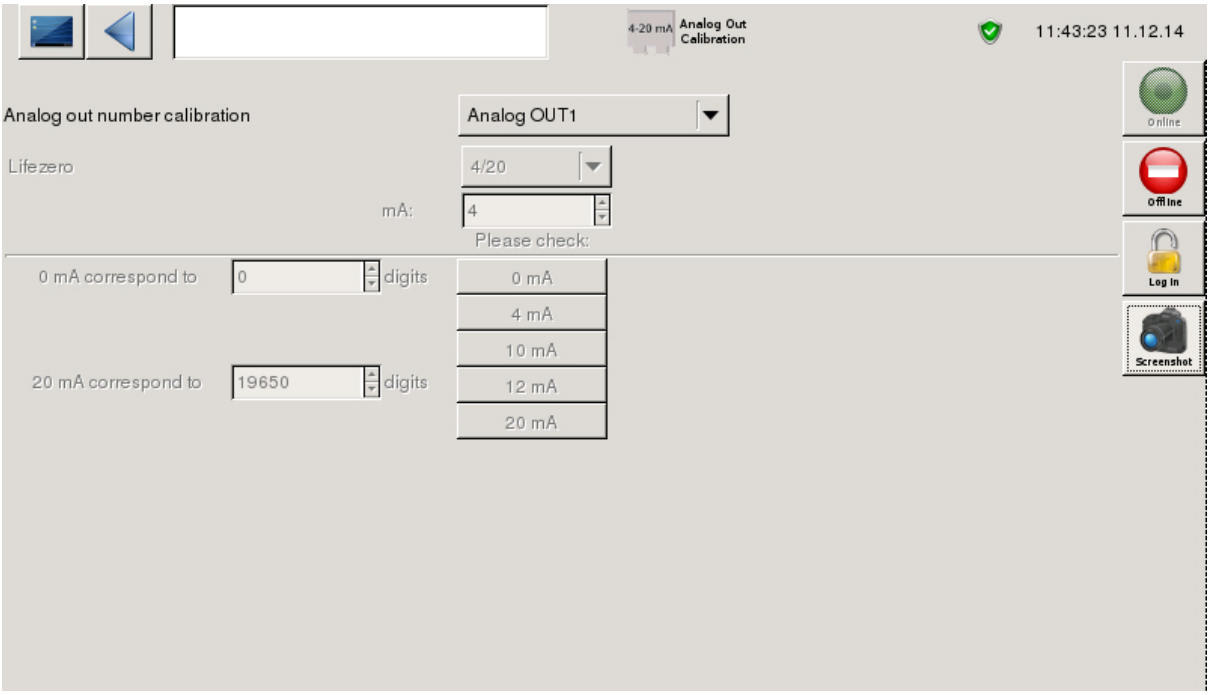

Fig. 77: Analog out calibration in level II as a user III

13.2.4 Signal curve (Level II)

On this screen, in level II, the user level III can see a few more parameters for each measurement phase that the level II user cannot see:

- signal start and end
- temperature in measurement cell
- O_2 consumption

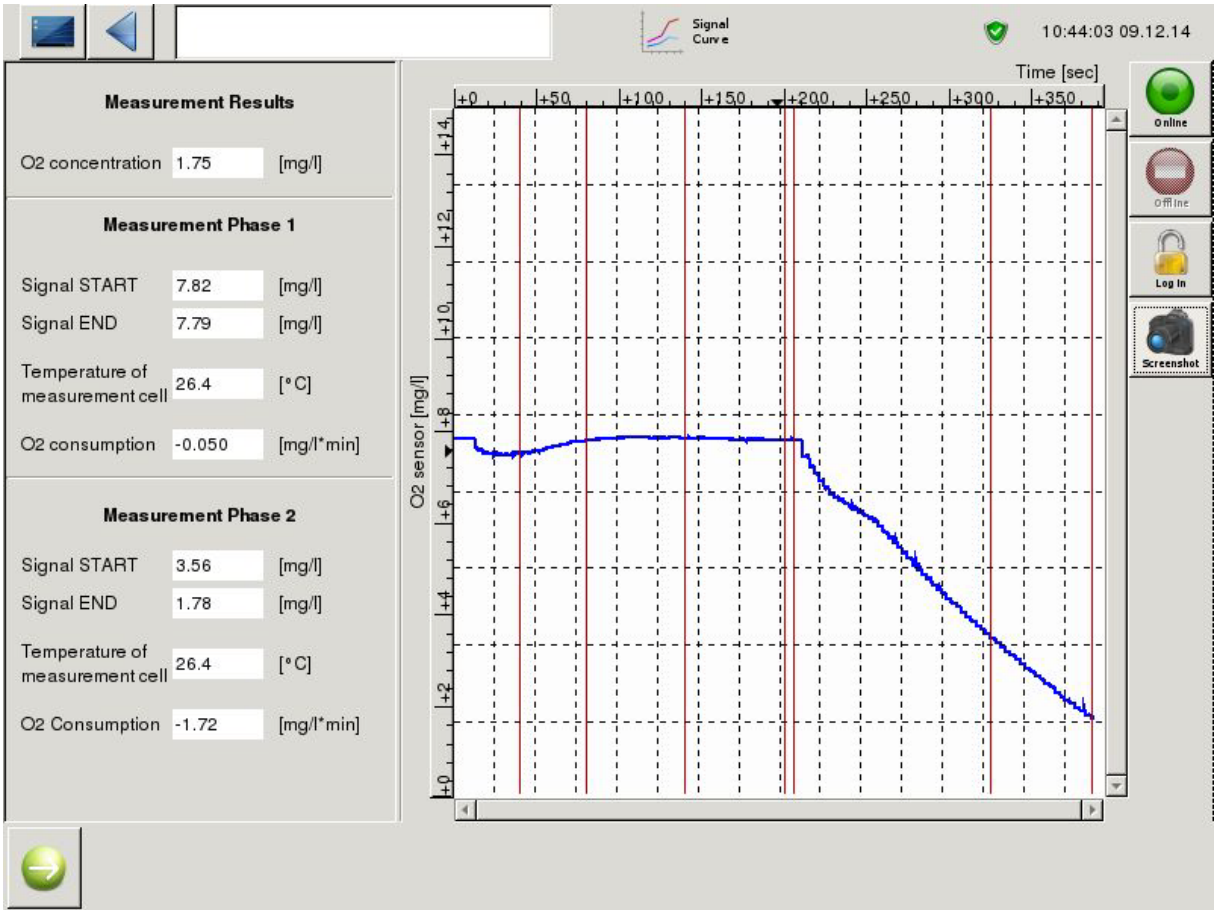

Fig. 78: Signal curve screen in level II as a user III

13.2.5 CAN selftest

The analyser has a so called CAN circuit diagram. All parts of the analyser are registered here and every part has its own ID. The analyser tests this plan independently and shows the results here.

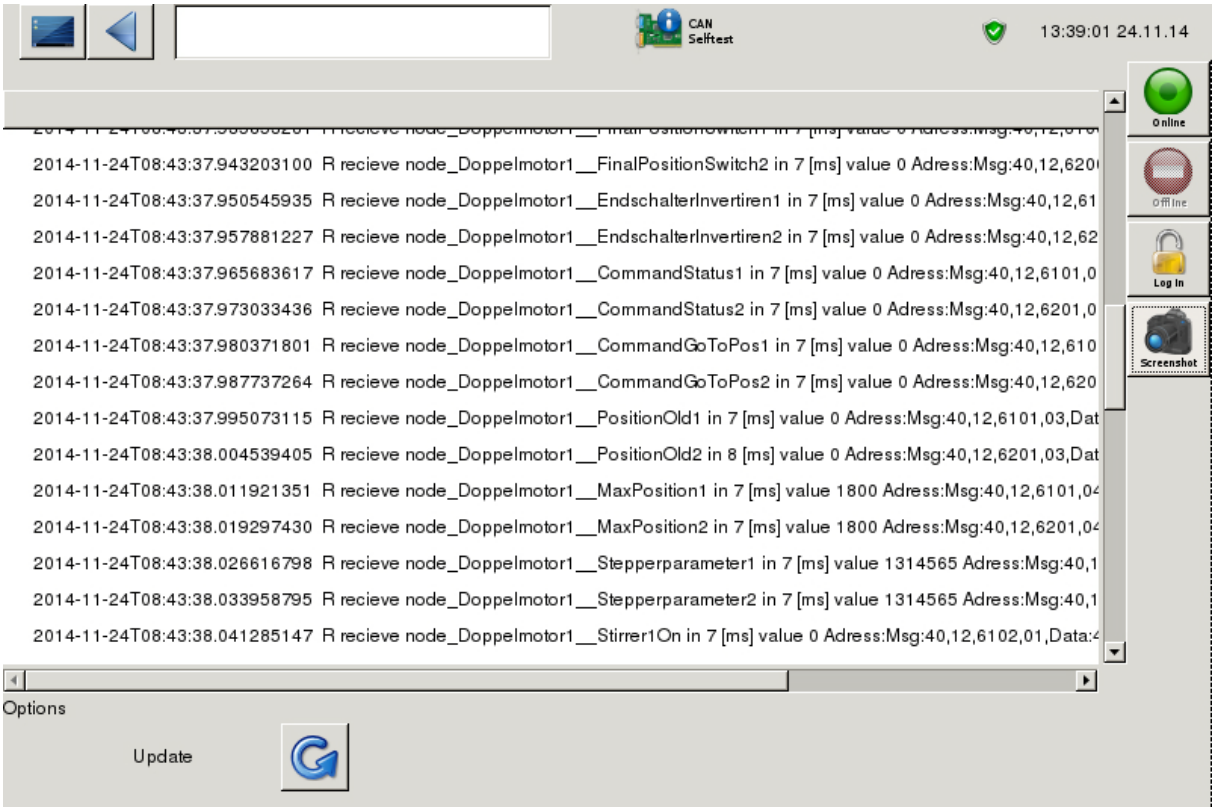

Fig. 79: CAN selftest

13.2.6 Digital IN

In these screen, the states of digital inputs 1 are shown.

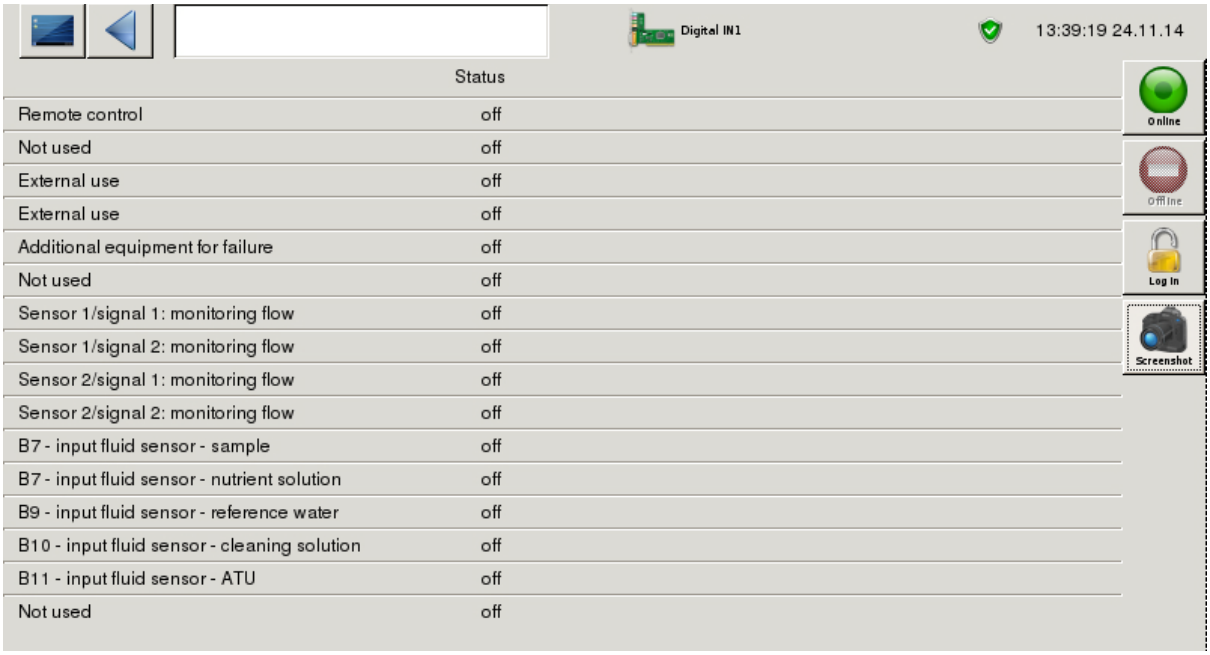

	Status
Remote control	off
Not used	off
External use	off
External use	off
Additional equipment for failure	off
Not used	off
Sensor 1/signal 1: monitoring flow	off
Sensor 1/signal 2: monitoring flow	off
Sensor 2/signal 1: monitoring flow	off
Sensor 2/signal 2: monitoring flow	off
B7 - input fluid sensor - sample	off
B7 - input fluid sensor - nutrient solution	off
B9 - input fluid sensor - reference water	off
B10 - input fluid sensor - cleaning solution	off
B11 - input fluid sensor - ATU	off
Not used	off

Fig. 80: Digital IN 1

13.2.7 Digital OUT 1

In these screen, the state of the digital outputs 1 (on/off) is shown and can be defined.Components of the analyser (example: valves) can be switched on. The functions are useful for troubleshooting or maintenance purpose.

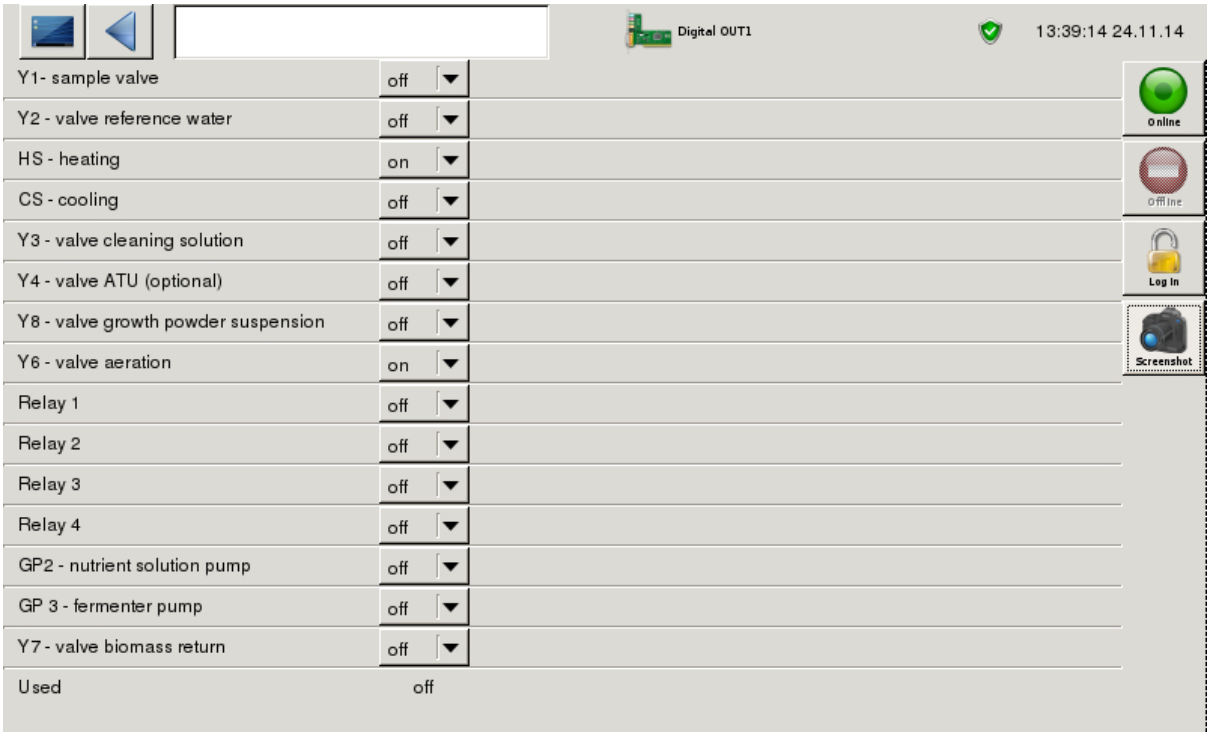

Fig. 81: Digital OUT 1

13.2.8 Update - Manager

In this screen a new software (updates and patches) can be installed. Connect the USB stick with the new software to the analyser and a red „Update“ symbol will appear in the status bar. Click on it and you will get to the update manager screen. Here the already installed data (can not be activated/deactivated) and the updates of the USB stick are shown. Choose the data files you want to install from the updates using the check boxes. Now click on “accept “ to install it or on „cancel“ if you have selected the wrong data files. If you click on “accept“ the screen will shut down for 30-40 seconds and the new software will be installed.
The yellow button with the arrow restarts the analyser with a soft reboot.

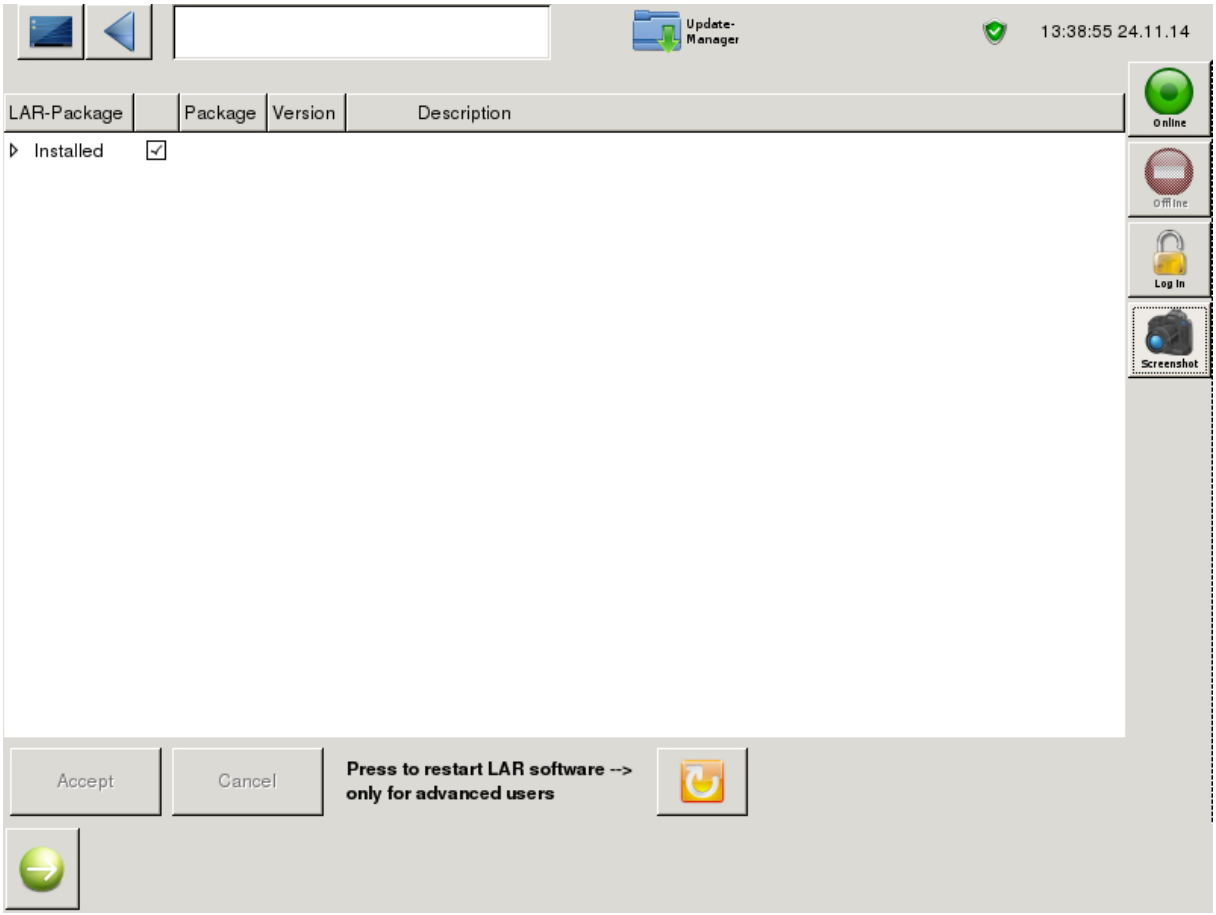

Fig. 82: Update - Manager

13.2.9 Names and Units

In this screen, the names, units and minimum and maximum of channels can be adjusted. The minimum and maximum is used to adjust the axis.

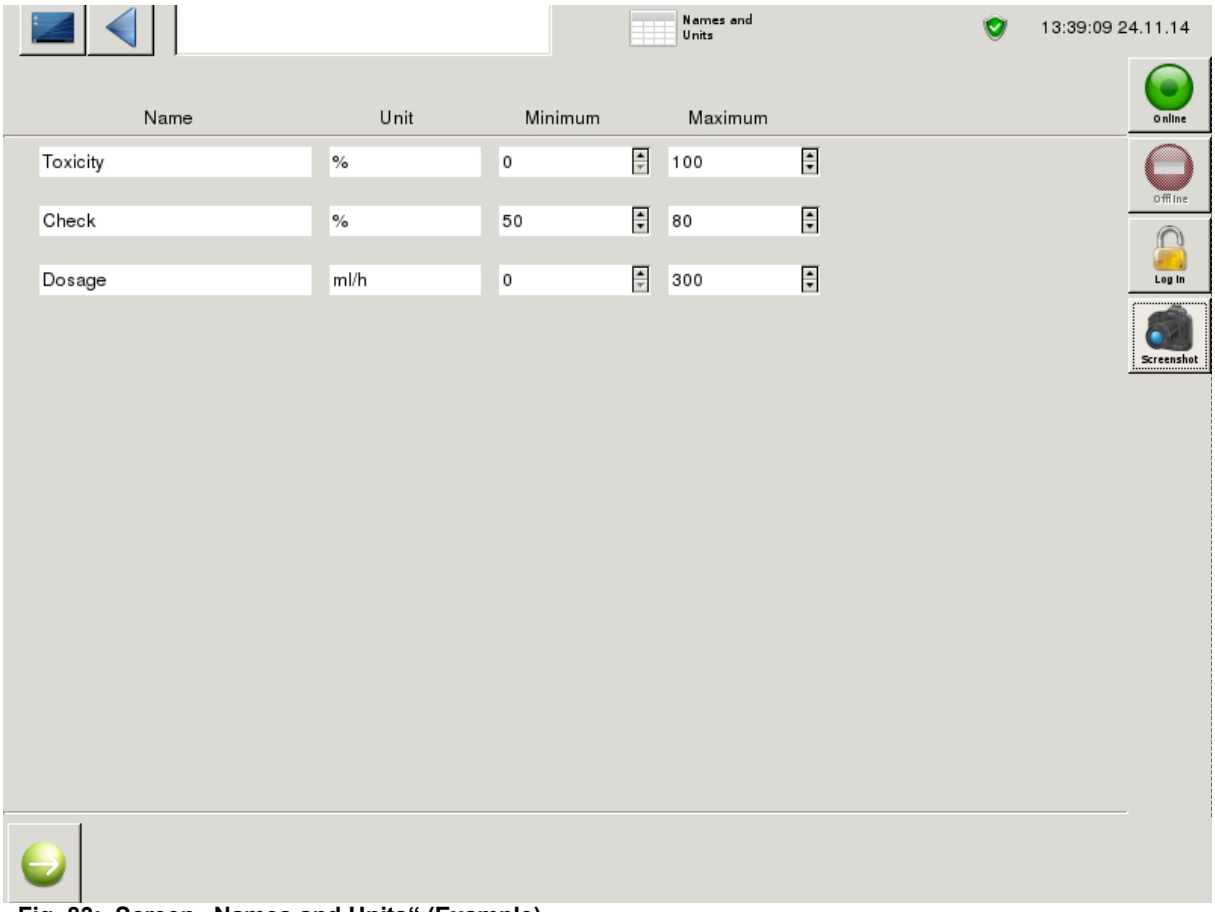

Fig. 83: Screen „Names and Units“ (Example)

13.2.10 Hardware Info

This screen shows information about the hardware of the analyser:
- PC info
- Network

The network settings can be adjusted (Chapter 13.2.2.3 on page 121).

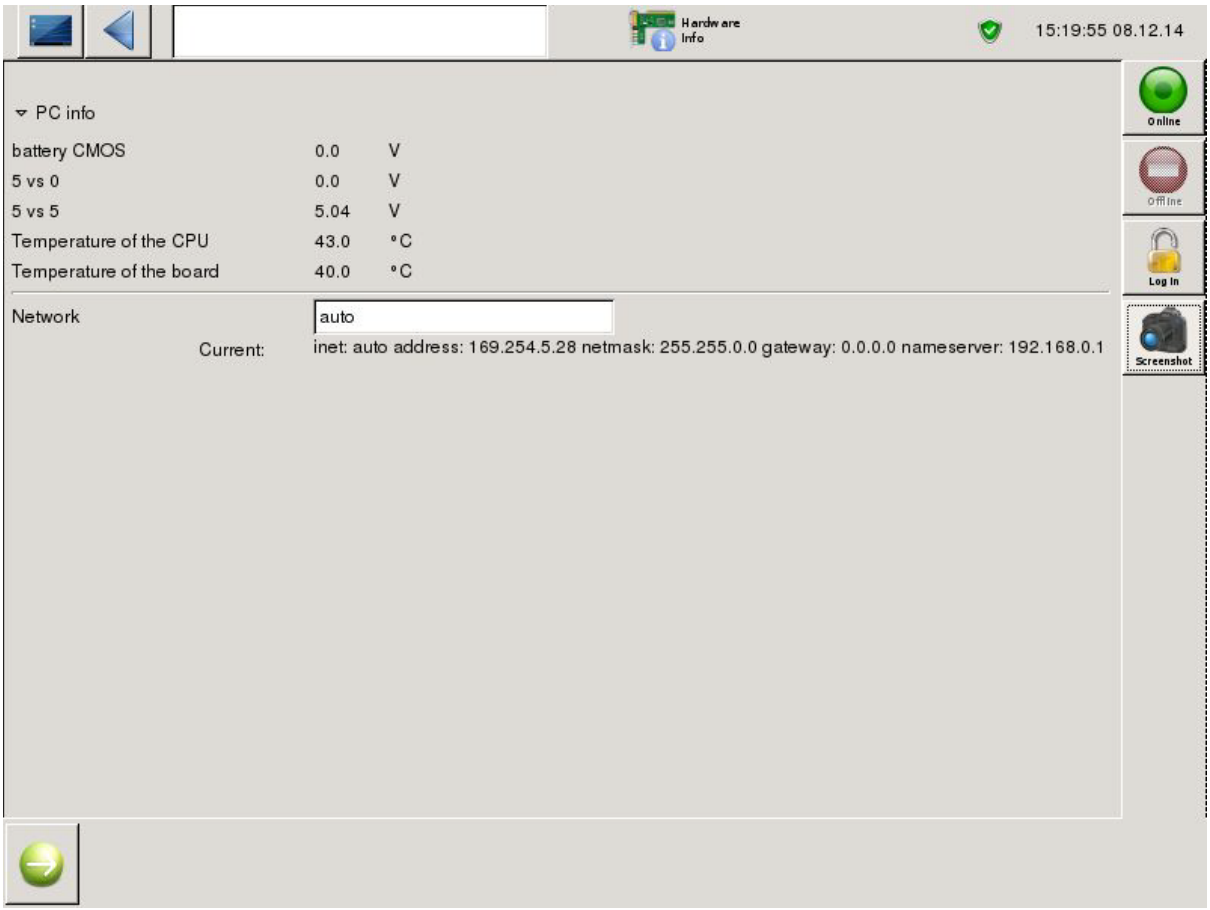

Fig. 84: Screen „Hardware Info“ (Example)

14 Safety data sheets of chemicals

14.1 Generally

The listed safety data sheets are originating from the company Merck KGaA, the Santa Cruz Biotechnology, LAR AG, VWR International and Fisher Scientific. Only the described chemicals of this operation manual are listed in this chapter.

The listed safety data sheets are examples for chemical producers and safety data sheets. There are a lot of other producers for chemicals with other safety data sheets.
The LAR AG does not guarantee the correctness or dateness of the safety data sheets.
Please make sure to get the most safety data sheets from your chemical supplier.

14.2 N-Allylthiourea ATU

N-Allylthiourea

sc-250442

Material Safety Data Sheet

Hazard Alert Code Key:	EXTREME	HIGH	MODERATE	LOW

Section 1 - CHEMICAL PRODUCT AND COMPANY IDENTIFICATION

PRODUCT NAME
N-Allylthiourea

STATEMENT OF HAZARDOUS NATURE

CONSIDERED A HAZARDOUS SUBSTANCE ACCORDING TO OSHA 29 CFR 1910.1200.

NFPA

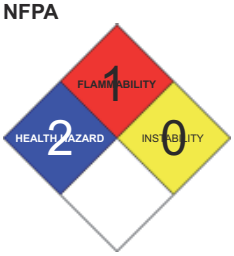

SUPPLIER
Santa Cruz Biotechnology, Inc.
2145 Delaware Avenue
Santa Cruz, California 95060
800.457.3801 or 831.457.3800

EMERGENCY
ChemWatch
Within the US & Canada: 877-715-9305
Outside the US & Canada: +800 2436 2255
(1-800-CHEMCALL) or call +613 9573 3112

SYNONYMS
C4-H8-N2-S, H2C=CHCH2NHC(=S)NH2, "urea, 1-allyl-2-thio-", allylthiocarbamide, allylthiourea, N-allylthiourea, 1-allylthiourea, (2-propenyl)thiourea, thiocynamine, thiosinamin, thiosinamine, Aminosin, Rhodalline, U-19571

Section 2 - HAZARDS IDENTIFICATION

CHEMWATCH HAZARD RATINGS

		Min	Max
Flammability	1		
Toxicity	3		
Body Contact	2		
Reactivity	1		
Chronic	2		

Min/Nil=0
Low=1
Moderate=2
High=3
Extreme=4

CANADIAN WHMIS SYMBOLS

EMERGENCY OVERVIEW

RISK

Toxic if swallowed.
Irritating to eyes, respiratory system and skin.

POTENTIAL HEALTH EFFECTS

ACUTE HEALTH EFFECTS

SWALLOWED

■ Toxic effects may result from the accidental ingestion of the material; animal experiments indicate that ingestion of less than 40 gram may be fatal or may produce serious damage to the health of the individual.
■ The thioureas, which are antithyroid drugs, can cause headache, anxiety, fever, rash and stomach upset.

EYE

■ This material can cause eye irritation and damage in some persons.

SKIN

■ This material can cause inflammation of the skin oncontact in some persons.
■ The material may accentuate any pre-existing dermatitis condition.
■ Skin contact with the material may damage the health of the individual; systemic effects may result following absorption.
■ Open cuts, abraded or irritated skin should not be exposed to this material.
■ Entry into the blood-stream, through, for example, cuts, abrasions or lesions, may produce systemic injury with harmful effects.
Examine the skin prior to the use of the material and ensure that any external damage is suitably protected.
■ Skin sensitivity to thiourea derivatives has been demonstrated in several studies.
Allergic contact dermatitis and photocontact dermatitis have been described.

INHALED

■ The material can cause respiratory irritation in some persons.
The body's response to such irritation can cause further lung damage.
■ Inhalation of dusts, generated by the material during the course of normal handling, may be damaging to the health of the individual.
■ Persons with impaired respiratory function, airway diseases and conditions such as emphysema or chronic bronchitis, may incur further disability if excessive concentrations of particulate are inhaled.
If prior damage to the circulatory or nervous systems has occurred or if kidney damage has been sustained, proper screenings should be conducted on individuals who may be exposed to further risk if handling and use of the material result in excessive exposures.

CHRONIC HEALTH EFFECTS

■ Long-term exposure to respiratory irritants may result in disease of the airways involving difficult breathing and related systemic problems.
Substance accumulation, in the human body, may occur and may cause some concern following repeated or long-term occupational exposure.
Long term exposure to high dust concentrations may cause changes in lung function i.e. pneumoconiosis; caused by particles less than 0.5 micron penetrating and remaining in the lung. Prime symptom is breathlessness; lung shadows show on X-ray.
Exposure to thiourea can result in reduced thyroid function. Prolonged exposure to high doses causes enlargement of the thyroid and reduced levels of circulating thyroid hormone. Thiourea derivatives are thought to be capable of changing cellular genetic material and they may cause birth defects.

Section 3 - COMPOSITION / INFORMATION ON INGREDIENTS

NAME	CAS RN	%
N-Allylthiourea	109-57-9	>98

Section 4 - FIRST AID MEASURES

SWALLOWED

- IF SWALLOWED, REFER FOR MEDICAL ATTENTION, WHERE POSSIBLE, WITHOUT DELAY.
- For advice, contact a Poisons Information Centre or a doctor.
- Urgent hospital treatment is likely to be needed.
- In the mean time, qualified first-aid personnel should treat the patient following observation and employing supportive measures as indicated by the patient's condition.

EYE

If this product comes in contact with the eyes
- Immediately hold eyelids apart and flush the eye continuously with running water.
- Ensure complete irrigation of the eye by keeping eyelids apart and away from eye and moving the eyelids by occasionally lifting the upper and lower lids.
- Continue flushing until advised to stop by the Poisons Information Centre or a doctor, or for at least 15 minutes.
- Transport to hospital or doctor without delay.

SKIN

If skin contact occurs
- Immediately remove all contaminated clothing, including footwear.
- Flush skin and hair with running water (and soap if available).
- Seek medical attention in event of irritation.

INHALED
- If fumes or combustion products are inhaled remove from contaminated area.
- Lay patient down. Keep warm and rested.
- Prostheses such as false teeth, which may block airway, should be removed, where possible, prior to initiating first aid procedures.
- Apply artificial respiration if not breathing, preferably with a demand valve resuscitator, bag-valve mask device, or pocket mask as trained. Perform CPR if necessary.

NOTES TO PHYSICIAN

■ Treat symptomatically.
for poisons (where specific treatment regime is absent)

BASIC TREATMENT

- Establish a patent airway with suction where necessary.
- Watch for signs of respiratory insufficiency and assist ventilation as necessary.
- Administer oxygen by non-rebreather mask at 10 to 15 L/min.
- Monitor and treat, where necessary, for pulmonary oedema .

Section 5 - FIRE FIGHTING MEASURES

Vapour Pressure (mmHG)	Negligible
Upper Explosive Limit (%)	Not available.
Specific Gravity (water=1)	1.110
Lower Explosive Limit (%)	Not available

EXTINGUISHING MEDIA
- Water spray or fog.
- Foam.
- Dry chemical powder.
- BCF (where regulations permit).

FIRE FIGHTING
- Alert Fire Brigade and tell them location and nature of hazard.
- Wear full body protective clothing with breathing apparatus.
- Prevent, by any means available, spillage from entering drains or water course.
- Use fire fighting procedures suitable for surrounding area.

When any large container (including road and rail tankers) is involved in a fire,
consider evacuation by 800 metres in all directions.

GENERAL FIRE HAZARDS/HAZARDOUS COMBUSTIBLE PRODUCTS
- Combustible solid which burns but propagates flame with difficulty; it is estimated that most organic dusts are combustible (circa 70%) - according to the circumstances under which the combustion process occurs, such materials may cause fires and / or dust explosions.
- Avoid generating dust, particularly clouds of dust in a confined or unventilated space as dusts may form an explosive mixture with air, and any source of ignition, i.e. flame or spark, will cause fire or explosion. Dust clouds generated by the fine grinding of the solid are a particular hazard; accumulations of fine dust (420 micron or less) may burn rapidly and fiercely if ignited - particles exceeding this limit will generally not form flammable dust clouds.; once initiated, however, larger particles up to 1400 microns diameter will contribute to the propagation of an explosion.
- In the same way as gases and vapours, dusts in the form of a cloud are only ignitable over a range of concentrations; in principle, the concepts of lower explosive limit (LEL) and upper explosive limit (UEL).are applicable to dust clouds but only the LEL is of practical use; - this is because of the inherent difficulty of achieving homogeneous dust clouds at high temperatures (for dusts the LEL is often called the "Minimum Explosible Concentration", MEC)
- A dust explosion may release of large quantities of gaseous products; this in turn creates a subsequent pressure rise of explosive force capable of damaging plant and buildings and injuring people.

Combustion products include carbon monoxide (CO), carbon dioxide (CO2), nitrogen oxides (NOx), sulfur oxides (SOx), other pyrolysis products typical of burning organic material.

May emit poisonous fumes.
FIRE INCOMPATIBILITY
- Avoid contamination with oxidising agents i.e. nitrates, oxidising acids, chlorine bleaches, pool chlorine etc. as ignition may result

Section 6 - ACCIDENTAL RELEASE MEASURES

MINOR SPILLS
- Remove all ignition sources.
- Clean up all spills immediately.
- Avoid contact with skin and eyes.
- Control personal contact by using protective equipment.

MAJOR SPILLS
- Clear area of personnel and move upwind.
- Alert Fire Brigade and tell them location and nature of hazard.
- Wear full body protective clothing with breathing apparatus.
- Prevent, by any means available, spillage from entering drains or water course.

Section 7 - HANDLING AND STORAGE

PROCEDURE FOR HANDLING
- Avoid all personal contact, including inhalation.
- Wear protective clothing when risk of exposure occurs.
- Use in a well-ventilated area.
- Prevent concentration in hollows and sumps.

Empty containers may contain residual dust which has the potential to accumulate following settling. Such dusts may explode in the presence of an appropriate ignition source.
- Do NOT cut, drill, grind or weld such containers.
- In addition ensure such activity is not performed near full, partially empty or empty containers without appropriate workplace safety authorisation or permit.

RECOMMENDED STORAGE METHODS
- Lined metal can, lined metal pail/ can.
- Plastic pail.
- Polyliner drum.
- Packing as recommended by manufacturer.

For low viscosity materials
- Drums and jerricans must be of the non-removable head type.
- Where a can is to be used as an inner package, the can must have a screwed enclosure.

<.

STORAGE REQUIREMENTS
- Store in original containers.
- Keep containers securely sealed.
- Store in a cool, dry, well-ventilated area.
- Store away from incompatible materials and foodstuff containers.

Section 8 - EXPOSURE CONTROLS / PERSONAL PROTECTION

EXPOSURE CONTROLS

Source	Material	TWA ppm	TWA mg/m³	STEL ppm	STEL mg/m³	Peak ppm	Peak mg/m³	TWA F/CC	Notes
Canada - Ontario Occupational Exposure Limits	1-allyl-2-thiourea (Particles (Insoluble or Poorly Soluble) Not Otherwise)		10 (I)						
Canada - British Columbia Occupational	1-allyl-2-thiourea (Particles (Insoluble or		10 (N)						

Exposure Limits	Poorly Soluble) Not Otherwise Classified (PNOC))			
Canada - Ontario Occupational Exposure Limits	1-allyl-2-thiourea (Specified (PNOS) / Particules (insolubles ou peu solubles) non précisées par ailleurs)		3 (R)	
US - Tennessee Occupational Exposure Limits - Limits For Air Contaminants	1-allyl-2-thiourea (Particulates not otherwise regulated Respirable fraction)		5	
US - California Permissible Exposure Limits for Chemical Contaminants	1-allyl-2-thiourea (Particulates not otherwise regulated Respirable fraction)		5	(n)
US - Oregon Permissible Exposure Limits (Z-1)	1-allyl-2-thiourea (Particulates not otherwise regulated (PNOR) (f) Total Dust)	-	10	Bold print identifies substances for which the Oregon Permissible Exposure Limits (PELs) are different than the federal Limits. PNOR means “particles not otherwise regulated.”
US - Michigan Exposure Limits for Air Contaminants	1-allyl-2-thiourea (Particulates not otherwise regulated, Respirable dust)		5	
US - Oregon Permissible Exposure Limits (Z-1)	1-allyl-2-thiourea (Particulates not otherwise regulated (PNOR) (f) Respirable Fraction)	-	5	Bold print identifies substances for which the Oregon Permissible Exposure Limits (PELs) are different than the federal Limits. PNOR means “particles not otherwise regulated.”
US - Wyoming Toxic and Hazardous Substances Table Z1 Limits for Air Contaminants	1-allyl-2-thiourea (Particulates not otherwise regulated (PNOR)(f)- Respirable fraction)		5	

PERSONAL PROTECTION

RESPIRATOR

- Particulate. (AS/NZS 1716 & 1715, EN 1432000 & 1492001, ANSI Z88 or national equivalent)

EYE

- Safety glasses with side shields.
- Chemical goggles.
- Contact lenses may pose a special hazard; soft contact lenses may absorb and concentrate irritants. A written policy document, describing the wearing of lens or restrictions on use, should be created for each workplace or task. This should include a review of lens absorption and adsorption for the class of chemicals in use and an account of injury experience. Medical and first-aid personnel should be trained in their removal and suitable equipment should be readily available. In the event of chemical exposure, begin eye irrigation immediately and remove contact lens as soon as practicable. Lens should be removed at the first signs of eye redness or irritation - lens should be removed in a clean environment only after workers have washed hands thoroughly. [CDC NIOSH Current Intelligence Bulletin 59], [AS/NZS 1336 or national equivalent]

HANDS/FEET

- Wear chemical protective gloves, eg. PVC.
- Wear safety footwear or safety gumboots, eg. Rubber

Suitability and durability of glove type is dependent on usage. Important factors in the selection of gloves include

- frequency and duration of contact,
- chemical resistance of glove material,
- glove thickness and
- dexterity

OTHER

- Overalls.
- Eyewash unit.
- Barrier cream.
- Skin cleansing cream.

ENGINEERING CONTROLS

■ Engineering controls are used to remove a hazard or place a barrier between the worker and the hazard. Well-designed engineering controls can be highly effective in protecting workers and will typically be independent of worker interactions to provide this high level of protection.
The basic types of engineering controls are
Process controls which involve changing the way a job activity or process is done to reduce the risk.
Enclosure and/or isolation of emission source which keeps a selected hazard "physically" away from the worker and ventilation that strategically "adds" and "removes" air in the work environment.

Section 9 - PHYSICAL AND CHEMICAL PROPERTIES

PHYSICAL PROPERTIES

Solid.
Mixes with water.

State	Divided solid	Molecular Weight	116.18
Melting Range (°F)	158- 162	Viscosity	Not Applicable
Boiling Range (°F)	Not available	Solubility in water (g/L)	Miscible
Flash Point (°F)	Not available	pH (1% solution)	Not available
Decomposition Temp (°F)	Not Available	pH (as supplied)	Not applicable
Autoignition Temp (°F)	Not available	Vapour Pressure (mmHG)	Negligible
Upper Explosive Limit (%)	Not available.	Specific Gravity (water=1)	1.110
Lower Explosive Limit (%)	Not available	Relative Vapour Density (air=1)	Not Applicable
Volatile Component (%vol)	Negligible	Evaporation Rate	Not applicable

APPEARANCE
Crystalline powder with bitter taste and slight garlic odour; mixes with water (130).

Section 10 - CHEMICAL STABILITY

CONDITIONS CONTRIBUTING TO INSTABILITY
- Presence of incompatible materials.
- Product is considered stable.
- Hazardous polymerisation will not occur.

STORAGE INCOMPATIBILITY
- Avoid reaction with oxidising agents

For incompatible materials - refer to Section 7 - Handling and Storage.

Section 11 - TOXICOLOGICAL INFORMATION

1-allyl-2-thiourea

TOXICITY AND IRRITATION
■ Asthma-like symptoms may continue for months or even years after exposure to the material ceases. This may be due to a non-allergenic condition known as reactive airways dysfunction syndrome (RADS) which can occur following exposure to high levels of highly irritating compound.

Section 12 - ECOLOGICAL INFORMATION

This material and its container must be disposed of as hazardous waste.

Ecotoxicity

Ingredient	Persistence: Water/Soil	Persistence: Air	Bioaccumulation	Mobility
1-allyl-2-thiourea	LOW	LOW	LOW	HIGH

Section 13 - DISPOSAL CONSIDERATIONS

Disposal Instructions
All waste must be handled in accordance with local, state and federal regulations.
- Containers may still present a chemical hazard/ danger when empty.
- Return to supplier for reuse/ recycling if possible.

Otherwise:
- If container can not be cleaned sufficiently well to ensure that residuals do not remain or if the container cannot be used to store the same product, then puncture containers, to prevent re-use, and bury at an authorised landfill.
- Where possible retain label warnings and MSDS and observe all notices pertaining to the product.

Legislation addressing waste disposal requirements may differ by country, state and/ or territory. Each user must refer to laws operating in their area. In some areas, certain wastes must be tracked.
A Hierarchy of Controls seems to be common - the user should investigate:
- Reduction
- Reuse
- Recycling
- Disposal (if all else fails)

This material may be recycled if unused, or if it has not been contaminated so as to make it unsuitable for its intended use. Shelf life considerations should also be applied in making decisions of this type. Note that properties of a material may change in use, and recycling or reuse may not always be appropriate. In most instances the supplier of the material should be consulted.
- DO NOT allow wash water from cleaning or process equipment to enter drains.
- It may be necessary to collect all wash water for treatment before disposal.
- In all cases disposal to sewer may be subject to local laws and regulations and these should be considered first.
- Where in doubt contact the responsible authority.
- Recycle wherever possible.
- Consult manufacturer for recycling options or consult local or regional waste management authority for disposal if no suitable treatment or disposal facility can be identified.
- Dispose of by: burial in a land-fill specifically licenced to accept chemical and / or pharmaceutical wastes or Incineration in a licenced apparatus (after admixture with suitable combustible material)

- Decontaminate empty containers. Observe all label safeguards until containers are cleaned and destroyed.

Section 14 - TRANSPORTATION INFORMATION

DOT:

Symbols:	None	Hazard class or Division:	6.1
Identification Numbers:	UN2811	PG:	III
Label Codes:	6.1	Special provisions:	IB8, IP3, T1, TP33
Packaging: Exceptions:	153	Packaging: Non-bulk:	213
Packaging: Exceptions:	153	Quantity limitations: Passenger aircraft/rail:	100 kg
Quantity Limitations: Cargo aircraft only:	200 kg	Vessel stowage: Location:	A
Vessel stowage: Other:	None		

Hazardous materials descriptions and proper shipping names:
Toxic solids, organic, n.o.s.

Air Transport IATA:

ICAO/IATA Class:	6.1	ICAO/IATA Subrisk:	None
UN/ID Number:	2811	Packing Group:	III
Special provisions:	A3		
Cargo Only			
Packing Instructions:	677	Maximum Qty/Pack:	200 kg
Passenger and Cargo		Passenger and Cargo	
Packing Instructions:	670	Maximum Qty/Pack:	100 kg
Passenger and Cargo Limited Quantity		Passenger and Cargo Limited Quantity	
Packing Instructions:	Y645	Maximum Qty/Pack:	10 kg

Shipping name:TOXIC SOLID, ORGANIC, N.O.S.(contains 1-allyl-2-thiourea)

Maritime Transport IMDG:

IMDG Class:	6.1	IMDG Subrisk:	None
UN Number:	2811	Packing Group:	III
EMS Number:	F-A,S-A	Special provisions:	223 274
Limited Quantities:	5 kg		

Shipping name:TOXIC SOLID, ORGANIC, N.O.S.(contains 1-allyl-2-thiourea)

Section 15 - REGULATORY INFORMATION

1-allyl-2-thiourea (CAS: 109-57-9) is found on the following regulatory lists;
"Canada Domestic Substances List (DSL)","Canada Substances in Products Regulated Under the Food and Drugs Act (F&DA) That Were In Commerce between January 1, 1987 and September 13, 2001 (English)","US Toxic Substances Control Act (TSCA) - Chemical Substance Inventory"

Section 16 - OTHER INFORMATION

LIMITED EVIDENCE
■ Inhalation and/or skin contact may produce health damage*.
■ Cumulative effects may result following exposure*.
* (limited evidence).

Denmark Advisory list for selfclassification of dangerous substances

Substance	CAS	Suggested codes
1- allyl- 2- thiourea	109- 57- 9	T; R25

■ Classification of the preparation and its individual components has drawn on official and authoritative sources as well as independent review by the Chemwatch Classification committee using available literature references.
A list of reference resources used to assist the committee may be found at:
www.chemwatch.net/references.

■ The (M)SDS is a Hazard Communication tool and should be used to assist in the Risk Assessment. Many factors determine whether the reported Hazards are Risks in the workplace or other settings.

■ For detailed advice on Personal Protective Equipment, refer to the following U.S. Regulations and Standards:
OSHA Standards - 29 CFR:
1910.132 - Personal Protective Equipment - General requirements
1910.133 - Eye and face protection
1910.134 - Respiratory Protection
1910.136 - Occupational foot protection
1910.138 - Hand Protection
Eye and face protection - ANSI Z87.1
Foot protection - ANSI Z41
Respirators must be NIOSH approved.

Issue Date: Jan-10-2010

Print Date:Feb-22-2012

9 of 9

14.3 Sodium hydroxide

SAFETY DATA SHEET
according to Regulation (EC) No. 1907/2006

Revision Date 15.11.2011 Version 17.2

SECTION 1. Identification of the substance/mixture and of the company/undertaking

1.1 Product identifier

Catalogue No.	106498
Product name	Sodium hydroxide pellets for analysis EMSURE® ISO
REACH Registration Number	A registration number is not available for this substance as the substance or its use are exempted from registration according to Article 2 REACH Regulation (EC) No 1907/2006, the annual tonnage does not require a registration or the registration is envisaged for a later registration deadline.

1.2 Relevant identified uses of the substance or mixture and uses advised against

Identified uses	Reagent for analysis, Chemical production For additional information on uses please refer to the Merck Chemicals portal (www.merck-chemicals.com).

1.3 Details of the supplier of the safety data sheet

Company	Merck KGaA * 64271 Darmstadt * Germany * Phone:+49 6151 72-0
Responsible Department	EQ-RS * e-mail: prodsafe@merckgroup.com

1.4 Emergency telephone number Please contact the regional company representation in your country.

SECTION 2. Hazards identification

2.1 Classification of the substance or mixture

Classification (REGULATION (EC) No 1272/2008)
Skin corrosion, Category 1A, H314
Corrosive to metals, Category 1, H290
For the full text of the H-Statements mentioned in this Section, see Section 16.

Classification (67/548/EEC or 1999/45/EC)

C	Corrosive	R35

For the full text of the R-phrases mentioned in this Section, see Section 16.

2.2 Label elements

Labelling (REGULATION (EC) No 1272/2008)

Hazard pictograms

Signal word
Danger

SAFETY DATA SHEET
according to Regulation (EC) No. 1907/2006

Catalogue No.	106498
Product name	Sodium hydroxide pellets for analysis EMSURE® ISO

Hazard statements
H290 May be corrosive to metals.
H314 Causes severe skin burns and eye damage.

Precautionary statements
P280 Wear protective gloves/ protective clothing/ eye protection/ face protection.
P301 + P330 + P331 IF SWALLOWED: rinse mouth. Do NOT induce vomiting.
P305 + P351 + P338 IF IN EYES: Rinse cautiously with water for several minutes. Remove contact lenses, if present and easy to do. Continue rinsing.
P309 + P310 IF exposed or if you feel unwell: Immediately call a POISON CENTER or doctor/physician.

Reduced labelling (≤125 ml)

Hazard pictograms

Signal word
Danger

Hazard statements
H314 Causes severe skin burns and eye damage.

Precautionary statements
P280 Wear protective gloves/ protective clothing/ eye protection/ face protection.
P301 + P330 + P331 IF SWALLOWED: rinse mouth. Do NOT induce vomiting.
P305 + P351 + P338 IF IN EYES: Rinse cautiously with water for several minutes. Remove contact lenses, if present and easy to do. Continue rinsing.
P309 + P310 IF exposed or if you feel unwell: Immediately call a POISON CENTER or doctor/physician.

Index-No. 011-002-00-6

Labelling (67/548/EEC or 1999/45/EC)

Symbol(s)	C	Corrosive
R-phrase(s)	35	Causes severe burns.
S-phrase(s)	26-37/39-45	In case of contact with eyes, rinse immediately with plenty of water and seek medical advice. Wear suitable gloves and eye/face protection. In case of accident or if you feel unwell, seek medical advice immediately (show the label where possible).
EC-No.	215-185-5	EC Label

2.3 Other hazards
None known.

SECTION 3. Composition/information on ingredients

Formula	NaOH	HNaO (Hill)
CAS-No.	1310-73-2	
Index-No.	011-002-00-6	
EC-No.	215-185-5	
Molar mass	40,00 g/mol	

SAFETY DATA SHEET
according to Regulation (EC) No. 1907/2006

Catalogue No.	106498
Product name	Sodium hydroxide pellets for analysis EMSURE® ISO

Hazardous components (REGULATION (EC) No 1272/2008)

Chemical Name (Concentration)

CAS-No.	EC-No. / Registration number	Index-No.	Classification
sodium hydroxide (<= 100 %)			
1310-73-2	215-185-5 / *)	011-002-00-6	Skin corrosion, Category 1A, H314 Corrosive to metals, H290

*) A registration number is not available for this substance as the substance or its use are exempted from registration according to Article 2 REACH Regulation (EC) No 1907/2006, the annual tonnage does not require a registration or the registration is envisaged for a later registration deadline.

For the full text of the H-Statements mentioned in this Section, see Section 16.

Hazardous components (1999/45/EC)

Chemical Name (Concentration)

CAS-No.	EC-No.	Index-No.	Classification
sodium hydroxide (<= 100 %)			
1310-73-2	215-185-5	011-002-00-6	C, Corrosive; R35

For the full text of the R-phrases mentioned in this Section, see Section 16.

SECTION 4. First aid measures

4.1 Description of first aid measures

After inhalation: fresh air. Get medical attention.

After skin contact: wash off with plenty of water. Swab with polyethylene glycol 400. Immediately remove contaminated clothing. Consult a physician.

After contact with eyes: Rinse with plenty of water keeping eyelids open, protecting the unaffected eye (at least 10 minutes). Seek medical advice immediately!

After swallowing: make victim drink water (two glasses at most), avoid vomiting (risk of perforation). Call a physician immediately. Do not attempt to neutralise.

4.2 Most important symptoms and effects, both acute and delayed

Irritation and corrosion, collapse, death
Risk of blindness!

4.3 Indication of any immediate medical attention and special treatment needed

No information available.

SECTION 5. Firefighting measures

5.1 Extinguishing media

Suitable extinguishing media
Use extinguishing measures that are appropriate to local circumstances and the surrounding environment.

Unsuitable extinguishing media
For this substance/mixture no limitations of extinguishing agents are given.

5.2 Special hazards arising from the substance or mixture

Not combustible.
Ambient fire may liberate hazardous vapours.

SAFETY DATA SHEET
according to Regulation (EC) No. 1907/2006

Catalogue No.	106498
Product name	Sodium hydroxide pellets for analysis EMSURE® ISO

5.3 Advice for firefighters

Special protective equipment for firefighters
Stay in danger area only with self-contained breathing apparatus. Prevent skin contact by keeping a safe distance or by wearing suitable protective clothing.

Further information
Prevent fire extinguishing water from contaminating surface water or the ground water system.

SECTION 6. Accidental release measures

6.1 Personal precautions, protective equipment and emergency procedures
Advice for non-emergency personnel: Avoid substance contact. Avoid inhalation of dusts. Ensure adequate ventilation. Evacuate the danger area, observe emergency procedures, consult an expert.

Advice for emergency responders: Protective equipment see section 8.

6.2 Environmental precautions
Do not empty into drains.

6.3 Methods and materials for containment and cleaning up
Cover drains. Collect, bind, and pump off spills.
Observe possible material restrictions (see sections 7.2 and 10.5).
Take up dry. Dispose of properly. Clean up affected area. Avoid generation of dusts.

6.4 Reference to other sections
Indications about waste treatment see section 13.

SECTION 7. Handling and storage

7.1 Precautions for safe handling
Observe label precautions.

7.2 Conditions for safe storage, including any incompatibilities
Tightly closed. Dry.

Requirements for storage areas and containers

No aluminium, tin, or zinc containers.

Store at +5°C to +30°C.

7.3 Specific end uses
Apart from the uses mentioned in section 1.2 no other specific uses are stipulated.

SECTION 8. Exposure controls/personal protection

8.1 Control parameters

8.2 Exposure controls

Engineering measures
Technical measures and appropriate working operations should be given priority over the use of personal protective equipment.

See section 7.1.

SAFETY DATA SHEET
according to Regulation (EC) No. 1907/2006

Catalogue No.	106498
Product name	Sodium hydroxide pellets for analysis EMSURE® ISO

Individual protection measures
Protective clothing needs to be selected specifically for the workplace, depending on concentrations and quantities of the hazardous substances handled. The chemical resistance of the protective equipment should be enquired at the respective supplier.

Hygiene measures
Immediately change contaminated clothing. Apply preventive skin protection. Wash hands and face after working with substance.

Eye/face protection
Tightly fitting safety goggles

Hand protection

full contact:

Glove material:	Nitrile rubber
Glove thickness:	0,11 mm
Break through time:	> 480 min

splash contact:

Glove material:	Nitrile rubber
Glove thickness:	0,11 mm
Break through time:	> 480 min

The protective gloves to be used must comply with the specifications of EC Directive 89/686/EEC and the related standard EN374, for example KCL 741 Dermatril® L (full contact), KCL 741 Dermatril® L (splash contact).
The breakthrough times stated above were determined by KCL in laboratory tests acc. to EN374 with samples of the recommended glove types.
This recommendation applies only to the product stated in the safety data sheet<(>,<)> supplied by us and for the designated use. When dissolving in or mixing with other substances and under conditions deviating from those stated in EN374 please contact the supplier of CE-approved gloves (e.g. KCL GmbH, D-36124 Eichenzell, Internet: www.kcl.de).

Other protective equipment
protective clothing

Respiratory protection
required when dusts are generated.
Recommended Filter type: Filter B-(P3)
The entrepeneur has to ensure that maintenance, cleaning and testing of respiratory protective devices are carried out according to the instructions of the producer. These measures have to be properly documented.

Environmental exposure controls
Do not empty into drains.

SECTION 9. Physical and chemical properties

9.1 Information on basic physical and chemical properties

Form	solid
Colour	colourless
Odour	odourless
Odour Threshold	No information available.

SAFETY DATA SHEET
according to Regulation (EC) No. 1907/2006

Catalogue No.	106498
Product name	Sodium hydroxide pellets for analysis EMSURE® ISO

pH	ca. 14 at 50 g/l 20 °C
Melting point	323 °C
Boiling point/boiling range	1.390 °C at 1.013 hPa
Flash point	not applicable
Evaporation rate	No information available.
Flammability (solid, gas)	No information available.
Lower explosion limit	not applicable
Upper explosion limit	not applicable
Vapour pressure	at 20 °C not applicable
Relative vapour density	No information available.
Relative density	2,13 g/cm³ at 20 °C
Water solubility	1.090 g/l at 20 °C
Partition coefficient: n-octanol/water	No information available.
Autoignition temperature	No information available.
Decomposition temperature	No information available.
Viscosity, dynamic	No information available.
Explosive properties	No information available.
Oxidizing properties	No information available.

9.2 Other data

Ignition temperature	not applicable
Corrosion	May be corrosive to metals.

SECTION 10. Stability and reactivity

10.1 Reactivity

See section 10.3.

10.2 Chemical stability

hygroscopic

SAFETY DATA SHEET
according to Regulation (EC) No. 1907/2006

Catalogue No.	106498
Product name	Sodium hydroxide pellets for analysis EMSURE® ISO

10.3 Possibility of hazardous reactions

Risk of explosion with:

Metals, Light metals

Formed could be:

Hydrogen

Violent reactions possible with:

Nitriles, Alkaline earth metals, ammonium compounds, Cyanides, magnesium, organic nitro compounds, organic combustible substances, phenols, oxidisable substances, acids

10.4 Conditions to avoid

Exposure to moisture.

10.5 Incompatible materials

Aluminium, brass, Metals, metal alloys, Zinc, Tin

10.6 Hazardous decomposition products

no information available
When using appropriately hazardous decomposition products are not expected.

SECTION 11. Toxicological information

11.1 Information on toxicological effects

Acute oral toxicity
Symptoms: If ingested, severe burns of the mouth and throat, as well as a danger of perforation of the oesophagus and the stomach.

Acute inhalation toxicity

Symptoms: burns of mucous membranes, Cough, Shortness of breath, Possible damages:, damage of respiratory tract

Skin irritation
rabbit
Result: Causes burns.
(RTECS)

Causes severe burns.

Eye irritation
rabbit
Result: Causes burns.
(RTECS)

Causes serious eye damage. Risk of blindness!

Genotoxicity in vitro
Mutagenicity (mammal cell test): micronucleus.
Result: negative
(Lit.)

Ames test
Result: negative
(IUCLID)

Teratogenicity
Did not show teratogenic effects in animal experiments. (Lit.)

Specific target organ toxicity - single exposure
The substance or mixture is not classified as specific target organ toxicant, single exposure.

SAFETY DATA SHEET
according to Regulation (EC) No. 1907/2006

Catalogue No.	106498
Product name	Sodium hydroxide pellets for analysis EMSURE® ISO

Specific target organ toxicity - repeated exposure
The substance or mixture is not classified as specific target organ toxicant, repeated exposure.

Aspiration hazard
Based on available data the classification criteria are not met.

11.2 Further information
Quantitative data on the toxicity of this product are not available.
Further toxicological data:
Systemic effects:
collapse, death
Further data:
Handle in accordance with good industrial hygiene and safety practice.

SECTION 12. Ecological information

12.1 Toxicity
Toxicity to fish
LC50 Oncorhynchus mykiss (rainbow trout): 45,4 mg/l; 96 h (50% solution) (IUCLID)

Toxicity to daphnia and other aquatic invertebrates.
EC50 Daphnia magna (Water flea): 76 mg/l; 24 h (50% solution) (External MSDS)

12.2 Persistence and degradability
Biodegradability

The methods for determining biodegradability are not applicable to inorganic substances.

12.3 Bioaccumulative potential
No information available.

12.4 Mobility in soil
No information available.

12.5 Results of PBT and vPvB assessment
PBT/vPvB assessment not available as chemical safety assessment not required/not conducted.

12.6 Other adverse effects
Additional ecological information
Biological effects:
Harmful effect due to pH shift.
Forms corrosive mixtures with water even if diluted.
Neutralisation possible in waste water treatment plants.
Further information on ecology
Discharge into the environment must be avoided.

SECTION 13. Disposal considerations

Waste treatment methods
See www.retrologistik.com for processes regarding the return of chemicals and containers, or contact us there if you have further questions.

SECTION 14. Transport information

ADR/RID
UN 1823 SODIUM HYDROXIDE, SOLID, 8, II
Environmentally hazardous no

SAFETY DATA SHEET
according to Regulation (EC) No. 1907/2006

Catalogue No.	106498
Product name	Sodium hydroxide pellets for analysis EMSURE® ISO

IATA
UN 1823 SODIUM HYDROXIDE, SOLID, 8, II
Environmentally hazardous no

IMDG
UN 1823 SODIUM HYDROXIDE, SOLID, 8, II
EmS F-A S-B
Marine pollutant no

The transport regulations ADR/RID, IATA - DGR, IMDG -Code are cited according to international regulations and in the form applicable in Germany. Possible national deviations in other countries are not considered.

SECTION 15. Regulatory information

15.1 Safety, health and environmental regulations/legislation specific for the substance or mixture

EU regulations

Major Accident Hazard Legislation	96/82/EC Directive 96/82/EC does not apply
Occupational restrictions	Take note of Dir 94/33/EC on the protection of young people at work.

National legislation

Storage class	8 B

15.2 Chemical Safety Assessment

For this product a chemical safety assessment was not carried out.

SECTION 16. Other information

Full text of H-Statements referred to under sections 2 and 3.

H290	May be corrosive to metals.
H314	Causes severe skin burns and eye damage.

Full text of R-phrases referred to under sections 2 and 3

R35	Causes severe burns.

Training advice
Provide adequate information, instruction and training for operators.

Key or legend to abbreviations and acronyms used in the safety data sheet
Used abbreviations and acronyms can be looked up at www.wikipedia.org.

Regional representation
This information is given on the authorised Safety Data Sheet for your country.

The information contained herein is based on the present state of our knowledge. It characterises the product with regard to the appropriate safety precautions. It does not represent a guarantee of any properties of the product.

14.4 Edisonite Super

Safety Data Sheet

According to EC Directive 91/155/EEC

1. Identification of the substance/preparation and of the company/undertaking

Identification of the product
Article No.: 13 61 00
Product name: Edisonite Super

Manufacturer identification
Company: Merz + Co. Merz Hygiene
Eckenheimer Landstr. 100-104 * 60318 Frankfurt * Germany
phone:+49 (0) 69/1503-424 or 563
telefax:+49 (0) 69/1503-404
e-mail: info.hygiene@merz.de

Supplier identification
Company: LAR Analytik & Umwelt GmbH
Adalbertstrasse 37 – 38 * 10179 Berlin * Germany
phone:+49 (0) 30/278958 – 0
telefax:+49 (0) 30/278958 – 66
e-mail: export@lar.com

2. Composition/information on ingredients

Dangerous ingredients

CAS-No.	identification	conc.	unit	symbol	R-phrases
068411-30-3	alkyl (C10/13) benzenesulfonic acid sodium-salt	<20	%	Xi	36/38

3. Hazards identification

No information available

4. First aid measures

After inhalation: fresh air. Make victim drink plenty of water, summon doctor.
After skin contact: wash off with plenty of water. Remove contaminated clothing.
After eye contact: rinse out with plenty of water with the eyelid held wide open. Summon eye specialist.
After swallowing: make victim drink plenty of water, summon doctor.

5. Fire-fighting measures

Suitable extinguishing media:
In adaptation to materials stored in the immediate neighbourhood.

Special risks:
Non-combustible.

Special protective equipment for fire fighting:
Do not stay in dangerous zone without self-contained breathing apparatus.

Other information:
Prevent fire-fighting water from entering surface water or groundwater.

LAR Safety Data Sheet According to EC Directive 91/155/EEC

Article No.: 13 61 00 47 40
Product name: Edisonite Super

6. Accidental release measures

Person-related precautionary measures:
Ensure supply of fresh air in enclosed rooms; do not inhale dusts.

Procedures for cleaning / absorption:
Take up dry. Forward for disposal. Clean up affected media.

7. Handling and storage

Handling:
Product is hygroscopic. Keep the product dry and tightly closed to avoid contamination and absorption of humidity. In the case of dust development ensure supply of fresh air in enclosed rooms and do not inhale dusts.

Storage:
Tightly closed in a dry, cool, and good ventilated place. Do not store in aluminium or light metal boxes.

8. Exposure controls/personal protection

Personal protective equipment:

Respiratory protection:	required when dusts are generated.
Eye protection:	required
Hand protection:	required
	Protective clothing should be selected specifically for the working place, depending on concentration and quantity of the hazardous substances handled. The resistance of the protective clothing to chemicals should be ascertained with the respective supplier.

Industrial hygiene:
Change contaminated clothing. Application of skin- protective barrier cream recommended. Wash hands after working with substance.

9. Physical and chemical properties

Form:	solid	
Colour:	light green	
Odour:	odourless	
pH value at 10 g/l H_2O	(25°C)	neutral
Melting temperature		> 250 °C
Ignition temperature		not available
Flash point		not available
Explosion limits	lower	not available
	upper	not available
Vapour pressure	(20°C)	not available
Relative vapour density		not available
Density	(20°C)	~ 800 kg/m³
Solubility in water	(20°C)	> 100 g/l

LAR Safety Data Sheet According to EC Directive 91/155/EEC

Article No.: 13 61 00 47 40
Product name: Edisonite Super

10. Stability and reactivity

Conditions to be avoided
No information available

Further information
No decomposition when stored and handled according to regulations.

11. Toxicological information

Acute toxicity

No available data.

Further toxicological information

Under appropriate handling and under attention of common hygienic rules, no harms have been reported.
Eye irritation of sensitive persons possible in seldom cases.

12. Ecological information

Eco-toxic effects:
Quantitative data on the ecological effect of this product are not available.

Further ecological data:
Do not allow to enter drinking water supplies or waste water.

13. Disposal considerations

Product:

Recycling has to be preferred instead of disposal. Can be incinerated in compliance with local official regulations.

Waste key number: 07 06 99 (EC)

Packaging:

Empty packaging may be treated like household waste or recycled.

14. Transport information

Not subject to transport regulations.

page 3 of 4

LAR Safety Data Sheet According to EC Directive 91/155/EEC

Article No.: 13 61 00 47 40
Product name: Edisonite Super

15. Regulatory information

Labelling according to EC Directives
Not subject to labelling regulations.

German regulations
Water pollution class 1 (slightly polluting substance)

Other regulations
Local regulations for dusts may apply.

16. Other information

The information under position 4 to 8 and 10 to 12 are partially not referring to the usage of the product according to the rules (see the usage and product information), but to the discharge of bigger amounts in case of accident or irregularity.

Date of issue: 14.08.2002

The information contained herein is based on the present state of our knowledge. It characterises the product with regard to the appropriate safety precautions. It does not represent a guarantee of the properties of the product.

page 4 of 4

14.5 Growth powder

Safety Data Sheet

According to EG-Directive 91/155/EWG

PROCESS ANALYSERS AG

1. Material / preparation name and company name

Name of the material or the preparation

Article name: Growth powder nutriflok S50 for the nitrifier culture

Information to the manufacturer / suppliers

Company: LAR Process Analysers AG
Neukoellnische Allee 134, D- 12057 Berlin
Tel.:+49 (0) 30/278958 – 0
Fax:+49 (0) 30/278958 – 66

2. Possible dangers

With attention of the normal hygiene rules became up to now no danger of the person observes.

3. Ventilation of the rooms

The airing of the rooms must be enough for the demands of the working place order.

4. Facilities

A wash basin should exist in the lab area.

Work surfaces and lab pieces of furniture must be easily to be cleaned.

5. Access regulations

From the perspective of the industrial safety no access regulations are necessary.

6. Smuggling and outward

From the perspective of labor protection no special measures are necessary.

7. Disposal

The provisions of the federal and state governments must be observed.
Growth powder can be disposed of without hazard untreated,
if they are not other regulations, such as the Genetic Engineering Safety Regulations, subject.

8. Maintenance

To protect against growth powder no special measures are necessary.

F:/LAR/E/Sicherheitsdatenblätter/SiDaFermenterbiologie

Seite 1 von 2

LAR Safety Data Sheet

According to EG-Directive 91/155/EWG

Article number: 704790
Article description : Growth powder nutriflok S50 for the nitrifier culture

9. Other information :

State of: 26.04.2013

This information is based on the today`s state of our knowledge and is intended to describe the product with regard to the appropriate safety precautions. They do not constitute a guarantee of the properties of the product

10. Reference:

BG Chemie B002 / B006

F:/LAR/E/Sicherheitsdatenblätter/SiDaFermenterbiologie

Seite 2 von 2

14.6 Bacteria culture

Safety Data Sheet

According to EG-Directive 91/155/EWG

1. Material / preparation name and company name

Name of the material or the preparation

Article name: Bacteria culture (inoculation the NitriTox / ToxAlarm)

Information to the manufacturer / suppliers

Company: LAR Process Analysers AG
Neukoellnische Allee 134, D- 12057 Berlin
Tel.:+49 (0) 30/278958 – 0
Fax:+49 (0) 30/278958 – 66

2. Possible dangers

With attention of the normal hygiene rules became up to now no danger of the person observes.

3. Ventilation of the rooms.

The airing of the rooms must be enough for the demands of the working place order.

4. Facilities

A wash basin should exist in the lab area.

Work surfaces and lab pieces of furniture must be easily to be cleaned.

5. Access regulations

From the perspective of the industrial safety no access regulations are necessary.

6. Smuggling and outward

From the perspective of labor protection no special measures are necessary.

7. Disposal

The provisions of the federal and state governments must be observed.
Biological agents can be disposed of without hazard untreated,
if they are not other regulations, such as the Genetic Engineering Safety Regulations, subject.

8. Maintenance

To protect against biological agents no special measures are necessary.

F:/LAR/E/Sicherheitsdatenblätter/SiDaFermenterbiologie

Seite 1 von 2

LAR Safety Data Sheet

According to EG-Directive 91/155/EWG

Article number: 704790
Article description : Bacteria culture (inoculation the NitriTox / ToxAlarm)

9. Other information :
State of: 01.11.2004 This information is based on the today`s state of our knowledge and is intended to describe the product with regard to the appropriate safety precautions. They do not constitute a guarantee of the properties of the product
10. Reference: BG Chemie B002 / B006

F:/LAR/E/Sicherheitsdatenblätter/SiDaFermenterbiologie

Seite 2 von 2

14.7 Hydrochloride acid

SAFETY DATA SHEET

according to Regulation (EC) No. 1907/2006

Revision Date 19.11.2012 Version 7.7

SECTION 1. Identification of the substance/mixture and of the company/undertaking

1.1 Product identifier

Catalogue No.	100316
Product name	Hydrochloric acid 25% for analysis EMSURE®
REACH Registration Number	This product is a mixture. REACH Registration Number see section 3.This product is a mixture. REACH Registration Number see section 3.

1.2 Relevant identified uses of the substance or mixture and uses advised against

Identified uses	Reagent for analysis, Chemical production For additional information on uses please refer to the Merck Chemicals portal (www.merck-chemicals.com).

1.3 Details of the supplier of the safety data sheet

Company	Merck KGaA * 64271 Darmstadt * Germany * Phone:+49 6151 72-0
Responsible Department	EQ-RS * e-mail: prodsafe@merckgroup.com

1.4 Emergency telephone number Please contact the regional company representation in your country.

SECTION 2. Hazards identification

2.1 Classification of the substance or mixture

Classification (REGULATION (EC) No 1272/2008)

Corrosive to metals, Category 1, H290
Skin corrosion, Category 1B, H314
Specific target organ toxicity - single exposure, Category 3, H335
For the full text of the H-Statements mentioned in this Section, see Section 16.

Classification (67/548/EEC or 1999/45/EC)

C	Corrosive	R34
Xi	Irritant	R37

For the full text of the R-phrases mentioned in this Section, see Section 16.

2.2 Label elements

Labelling (REGULATION (EC) No 1272/2008)

Hazard pictograms

Signal word
Danger

The Safety Data Sheets for catalogue items are available at www.merck-chemicals.com

Page 1 of 10

SAFETY DATA SHEET
according to Regulation (EC) No. 1907/2006

Catalogue No.	100316
Product name	Hydrochloric acid 25% for analysis EMSURE®

Hazard statements
H290 May be corrosive to metals.
H314 Causes severe skin burns and eye damage.
H335 May cause respiratory irritation.

Precautionary statements
Prevention
P280 Wear protective gloves/ protective clothing/ eye protection/ face protection.
Response
P301 + P330 + P331 IF SWALLOWED: rinse mouth. Do NOT induce vomiting.
P304 + P340 IF INHALED: Remove victim to fresh air and keep at rest in a position comfortable for breathing.
P305 + P351 + P338 IF IN EYES: Rinse cautiously with water for several minutes. Remove contact lenses, if present and easy to do. Continue rinsing.
P309 + P310 IF exposed or if you feel unwell: Immediately call a POISON CENTER or doctor/physician.

Reduced labelling (≤125 ml)

Hazard pictograms

Signal word
Danger

Hazard statements
H314 Causes severe skin burns and eye damage.

Precautionary statements
P280 Wear protective gloves/ protective clothing/ eye protection/ face protection.
P301 + P330 + P331 IF SWALLOWED: rinse mouth. Do NOT induce vomiting.
P305 + P351 + P338 IF IN EYES: Rinse cautiously with water for several minutes. Remove contact lenses, if present and easy to do. Continue rinsing.
P309 + P310 IF exposed or if you feel unwell: Immediately call a POISON CENTER or doctor/physician.

Labelling (67/548/EEC or 1999/45/EC)

Symbol(s)	C	Corrosive
R-phrase(s)	34-37	Causes burns. Irritating to respiratory system.
S-phrase(s)	26-45	In case of contact with eyes, rinse immediately with plenty of water and seek medical advice. In case of accident or if you feel unwell, seek medical advice immediately (show the label where possible).

Reduced labelling (≤125 ml)

Symbol(s)	C	Corrosive
R-phrase(s)	34	Causes burns.
S-phrase(s)	26-36/37/39-45	In case of contact with eyes, rinse immediately with plenty of water and seek medical advice. Wear suitable protective clothing, gloves and eye/face protection. In case of accident or if you feel unwell, seek medical advice immediately (show the label where possible).

2.3 Other hazards
None known.

SAFETY DATA SHEET
according to Regulation (EC) No. 1907/2006

Catalogue No.	100316
Product name	Hydrochloric acid 25% for analysis EMSURE®

SECTION 3. Composition/information on ingredients

Chemical nature Aqueous solution

3.1 Substance

not applicable

3.2 Mixture

Hazardous components (REGULATION (EC) No 1272/2008)

Chemical Name (Concentration)

CAS-No.	Registration number	Classification
hydrochloric acid (>= 25 % - < 50 %)		
7647-01-0	*)	Specific target organ toxicity - single exposure, Category 3, H335 Skin corrosion, Category 1B, H314 Corrosive to metals, Category 1, H290

*) A registration number is not available for this substance as the substance or its use are exempted from registration according to Article 2 REACH Regulation (EC) No 1907/2006, the annual tonnage does not require a registration or the registration is envisaged for a later registration deadline.

For the full text of the H-Statements mentioned in this Section, see Section 16.

Hazardous components (1999/45/EC)

Chemical Name (Concentration)

CAS-No.	Classification
hydrochloric acid (>= 25 % - < 50 %)	
7647-01-0	C, Corrosive; R34 Xi, Irritant; R37

For the full text of the R-phrases mentioned in this Section, see Section 16.

SECTION 4. First aid measures

4.1 Description of first aid measures

General advice

First aider needs to protect himself.

After inhalation: fresh air. Call in physician.

After skin contact: wash off with plenty of water. Immediately remove contaminated clothing. If available swab with polyethylene glycol 400. Call a physician immediately.

After eye contact: rinse out with plenty of water. Immediately call in ophthalmologist.

After swallowing: make victim drink water (two glasses at most), avoid vomiting (risk of perforation). Call a physician immediately. Do not attempt to neutralise.

4.2 Most important symptoms and effects, both acute and delayed

Irritation and corrosion, Cough, Shortness of breath, cardiovascular disorders, Risk of blindness!

4.3 Indication of any immediate medical attention and special treatment needed

No information available.

SECTION 5. Firefighting measures

5.1 Extinguishing media

SAFETY DATA SHEET
according to Regulation (EC) No. 1907/2006

Catalogue No.	100316
Product name	Hydrochloric acid 25% for analysis EMSURE®

Suitable extinguishing media
Use extinguishing measures that are appropriate to local circumstances and the surrounding environment.

Unsuitable extinguishing media
For this substance/mixture no limitations of extinguishing agents are given.

5.2 Special hazards arising from the substance or mixture
Not combustible.
Ambient fire may liberate hazardous vapours.
Fire may cause evolution of:
Hydrogen chloride gas

5.3 Advice for firefighters
Special protective equipment for firefighters
Stay in danger area only with self-contained breathing apparatus. Prevent skin contact by keeping a safe distance or by wearing suitable protective clothing.

Further information
Suppress (knock down) gases/vapours/mists with a water spray jet. Prevent fire extinguishing water from contaminating surface water or the ground water system.

SECTION 6. Accidental release measures

6.1 Personal precautions, protective equipment and emergency procedures
Advice for non-emergency personnel: Do not breathe vapours, aerosols. Avoid substance contact. Ensure adequate ventilation. Evacuate the danger area, observe emergency procedures, consult an expert.

Advice for emergency responders: Protective equipment see section 8.

6.2 Environmental precautions
Do not empty into drains.

6.3 Methods and materials for containment and cleaning up
Cover drains. Collect, bind, and pump off spills.
Observe possible material restrictions (see sections 7 and 10).
Take up with liquid-absorbent and neutralising material (e.g. Chemizorb® H^+, Merck Art. No. 101595). Dispose of properly. Clean up affected area.

6.4 Reference to other sections
Indications about waste treatment see section 13.

SECTION 7. Handling and storage

7.1 Precautions for safe handling
Advice on safe handling
Observe label precautions.

Hygiene measures
Immediately change contaminated clothing. Apply preventive skin protection. Wash hands and face after working with substance.

7.2 Conditions for safe storage, including any incompatibilities
Storage conditions
Requirements for storage areas and containers

No metal containers.

SAFETY DATA SHEET
according to Regulation (EC) No. 1907/2006

Catalogue No.	100316
Product name	Hydrochloric acid 25% for analysis EMSURE®

Tightly closed.

Storage temperature: no restrictions.

7.3 Specific end use(s)
Apart from the uses mentioned in section 1.2 no other specific uses are stipulated.

SECTION 8. Exposure controls/personal protection

8.1 Control parameters

8.2 Exposure controls

Engineering measures
Technical measures and appropriate working operations should be given priority over the use of personal protective equipment.

See section 7.1.

Individual protection measures
Protective clothing needs to be selected specifically for the workplace, depending on concentrations and quantities of the hazardous substances handled. The chemical resistance of the protective equipment should be enquired at the respective supplier.

Eye/face protection
Tightly fitting safety goggles

Hand protection
full contact:

Glove material:	Nitrile rubber
Glove thickness:	0,11 mm
Break through time:	> 480 min

splash contact:

Glove material:	natural latex
Glove thickness:	0,6 mm
Break through time:	> 120 min

The protective gloves to be used must comply with the specifications of EC Directive 89/686/EEC and the related standard EN374, for example KCL 741 Dermatril® L (full contact), KCL 706 Lapren® (splash contact).
The breakthrough times stated above were determined by KCL in laboratory tests acc. to EN374 with samples of the recommended glove types.
This recommendation applies only to the product stated in the safety data sheet<(>,<)> supplied by us and for the designated use. When dissolving in or mixing with other substances and under conditions deviating from those stated in EN374 please contact the supplier of CE-approved gloves (e.g. KCL GmbH, D-36124 Eichenzell, Internet: www.kcl.de).

Other protective equipment
Acid-resistant protective clothing

Respiratory protection
required when vapours/aerosols are generated.
Recommended Filter type: filter E-(P2)
The entrepeneur has to ensure that maintenance, cleaning and testing of respiratory protective devices are carried out according to the instructions of the producer. These measures have to be properly documented.

SAFETY DATA SHEET
according to Regulation (EC) No. 1907/2006

Catalogue No.	100316
Product name	Hydrochloric acid 25% for analysis EMSURE®

Environmental exposure controls
Do not empty into drains.

SECTION 9. Physical and chemical properties

9.1 Information on basic physical and chemical properties

Form	liquid
Colour	colourless
Odour	stinging
Odour Threshold	No information available.
pH	< 1 at 20 °C
Melting point	ca. -70 °C
Boiling point/boiling range	107 °C at 1.013 hPa
Flash point	not applicable
Evaporation rate	No information available.
Flammability (solid, gas)	not applicable
Lower explosion limit	not applicable
Upper explosion limit	not applicable
Vapour pressure	12 hPa at 20 °C
Relative vapor density	No information available.
Relative density	ca.1,12 g/cm³ at 20 °C
Water solubility	at 20 °C soluble
Partition coefficient: n-octanol/water	No information available.
Auto-ignition temperature	No information available.
Decomposition temperature	No information available.
Viscosity, dynamic	No information available.
Explosive properties	Not classified as explosive.
Oxidizing properties	none

SAFETY DATA SHEET
according to Regulation (EC) No. 1907/2006

Catalogue No.	100316
Product name	Hydrochloric acid 25% for analysis EMSURE®

9.2 Other data

Ignition temperature	not applicable
Corrosion	May be corrosive to metals.

SECTION 10. Stability and reactivity

10.1 Reactivity
Corrosive in contact with metals

10.2 Chemical stability
The product is chemically stable under standard ambient conditions (room temperature) .

10.3 Possibility of hazardous reactions
Exothermic reaction with:

Amines, potassium permanganate, salts of oxyhalogenic acids, semimetallic oxides, semimetallic hydrogen compounds, Aldehydes, vinylmethyl ether

Risk of ignition or formation of inflammable gases or vapours with:

carbides, lithium silicide, Fluorine, Aluminium, hydrides, formaldehyde, Metals, strong alkalis, Sulphides

Risk of explosion with:

Alkali metals, conc. sulfuric acid

10.4 Conditions to avoid
Heating.

10.5 Incompatible materials
Metals, metal alloys
Gives off hydrogen by reaction with metals.

10.6 Hazardous decomposition products
in the event of fire: See section 5.

SECTION 11. Toxicological information

11.1 Information on toxicological effects
Mixture

Acute oral toxicity
Symptoms: If ingested, severe burns of the mouth and throat, as well as a danger of perforation of the oesophagus and the stomach.

Acute inhalation toxicity

Symptoms: mucosal irritations, Cough, Shortness of breath, Possible damages:, damage of respiratory tract

Acute dermal toxicity
This information is not available.

Skin irritation
Mixture causes burns.

Eye irritation
Mixture causes serious eye damage. Risk of blindness!

SAFETY DATA SHEET
according to Regulation (EC) No. 1907/2006

Catalogue No.	100316
Product name	Hydrochloric acid 25% for analysis EMSURE®

Sensitisation
This information is not available.

Germ cell mutagenicity
This information is not available.

Carcinogenicity
This information is not available.

Reproductive toxicity
This information is not available.

Teratogenicity
This information is not available.

Specific target organ toxicity - single exposure
Mixture may cause respiratory irritation.

Specific target organ toxicity - repeated exposure
This information is not available.

Aspiration hazard
This information is not available.

11.2 Further information
Quantitative data on the toxicity of this product are not available.
Further toxicological data:
After uptake:
After a latency period:
cardiovascular disorders
Further data:
Handle in accordance with good industrial hygiene and safety practice.

Components

hydrochloric acid
Acute inhalation toxicity
LC50 rat: 4,74 mg/l; 1 h (RTECS)

SECTION 12. Ecological information

Mixture

12.1 Toxicity
No information available.

12.2 Persistence and degradability
No information available.

12.3 Bioaccumulative potential
No information available.

12.4 Mobility in soil
No information available.

12.5 Results of PBT and vPvB assessment
PBT/vPvB assessment not available as chemical safety assessment not required/not conducted.

12.6 Other adverse effects
Additional ecological information
Biological effects:
Forms corrosive mixtures with water even if diluted. Harmful effect due to pH shift.
Further information on ecology
Discharge into the environment must be avoided.

SAFETY DATA SHEET
according to Regulation (EC) No. 1907/2006

Catalogue No.	100316
Product name	Hydrochloric acid 25% for analysis EMSURE®

Components

hydrochloric acid
No information available.

SECTION 13. Disposal considerations

Waste treatment methods
See www.retrologistik.com for processes regarding the return of chemicals and containers, or contact us there if you have further questions.

SECTION 14. Transport information

Land transport (ADR/RID)

14.1 UN number	UN 1789
14.2 Proper shipping name	HYDROCHLORIC ACID
14.3 Class	8
14.4 Packing group	II
14.5 Environmentally hazardous	--
14.6 Special precautions for user	yes
Tunnel restriction code	E

Inland waterway transport (ADN)
Not relevant

Air transport (IATA)

14.1 UN number	UN 1789
14.2 Proper shipping name	HYDROCHLORIC ACID
14.3 Class	8
14.4 Packing group	II
14.5 Environmentally hazardous	--
14.6 Special precautions for user	no

Sea transport (IMDG)

14.1 UN number	UN 1789
14.2 Proper shipping name	HYDROCHLORIC ACID
14.3 Class	8
14.4 Packing group	II
14.5 Environmentally hazardous	--
14.6 Special precautions for user	yes
EmS	F-A S-B

14.7 Transport in bulk according to Annex II of MARPOL 73/78 and the IBC Code
Not relevant

SECTION 15. Regulatory information

15.1 Safety, health and environmental regulations/legislation specific for the substance or mixture

EU regulations

SAFETY DATA SHEET
according to Regulation (EC) No. 1907/2006

Catalogue No.	100316
Product name	Hydrochloric acid 25% for analysis EMSURE®

Major Accident Hazard Legislation	96/82/EC Directive 96/82/EC does not apply
Occupational restrictions	Take note of Dir 94/33/EC on the protection of young people at work.
National legislation	
Storage class	8 B

15.2 Chemical Safety Assessment

For this product a chemical safety assessment was not carried out.

SECTION 16. Other information

Full text of H-Statements referred to under sections 2 and 3.

H290	May be corrosive to metals.
H314	Causes severe skin burns and eye damage.
H335	May cause respiratory irritation.

Full text of R-phrases referred to under sections 2 and 3

R34	Causes burns.
R37	Irritating to respiratory system.

Training advice
Provide adequate information, instruction and training for operators.

Key or legend to abbreviations and acronyms used in the safety data sheet
Used abbreviations and acronyms can be looked up at www.wikipedia.org.

Regional representation
This information is given on the authorised Safety Data Sheet for your country.

The information contained herein is based on the present state of our knowledge. It characterises the product with regard to the appropriate safety precautions. It does not represent a guarantee of any properties of the product.

14.8 Potassium phosphate

MERCK

Safety Data Sheet

According to EC Directive 91/155/EEC

Date of issue:	06.10.2004
Supersedes edition of	06.02.2004

1. Identification of the substance/preparation and of the company/undertaking

Identification of the product

Catalogue No.:	104873
Product name:	Potassium dihydrogen phosphate GR for analysis ISO

Use of the substance/preparation

Reagent for analysis
Chemical production

Company/undertaking identification

Company:	Merck KGaA * 64271 Darmstadt * Germany * Phone: +49 6151 72-0
Emergency telephone No.:	Please contact the regional Merck representation in your country.

2. Composition/information on ingredients

Synonyms

Potassium biphosphate, Potassium phosphate monobasic, Soerensen's buffer substances

CAS-No.:	7778-77-0		
M:	136.09 g/mol	EC-No.:	231-913-4
Formula Hill:	H_2KO_4P		
Chemical formula:	KH_2PO_4		

3. Hazards identification

No hazardous product as specified in Directive 67/548/EEC.

4. First aid measures

After inhalation: fresh air.
After skin contact: wash off with plenty of water. Remove contaminated clothing.
After eye contact: rinse out with plenty of water with the eyelid held wide open. Call in ophtalmologist if necessary.
After swallowing: make victim drink plenty of water. Consult doctor if feeling unwell.

The Safety Data Sheets for catalog items are also available at www.chemdat.info Page 1 of 5

Merck Safety Data Sheet

According to EC Directive 91/155/EEC

Catalogue No.: 104873
Product name: Potassium dihydrogen phosphate GR for analysis ISO

5. Fire-fighting measures

Suitable extinguishing media:
In adaption to materials stored in the immediate neighbourhood.

Special risks:
Non-combustible. Ambient fire may liberate hazardous vapours. The following may develop in event of fire: phosphorus oxides.

Special protective equipment for fire fighting:
Do not stay in dangerous zone without self-contained breathing apparatus.

Other information:
Contain escaping vapours with water. Prevent fire-fighting water from entering surface water or groundwater.

6. Accidental release measures

Person-related precautionary measures:
Avoid generation of dusts; do not inhale dusts.

Environmental-protection measures:
Do not allow to enter sewerage system.

Procedures for cleaning / absorption:
Take up dry. Forward for disposal. Clean up affected area.

7. Handling and storage

Handling:

No further requirements.

Storage:

Tightly closed. Dry. At +5°C to +30°C.

8. Exposure controls/personal protection

Personal protective equipment:

Protective clothing should be selected specifically for the working place, depending on concentration and quantity of the hazardous substances handled. The resistance of the protective clothing to chemicals should be ascertained with the respective supplier.

Respiratory protection: required when dusts are generated.

Eye protection: required

Merck Safety Data Sheet

According to EC Directive 91/155/EEC

Catalogue No.: 104873
Product name: Potassium dihydrogen phosphate GR for analysis ISO

Hand protection:

In full contact:

Glove material:	nitrile rubber
Layer thickness:	0.11 mm
Breakthrough time:	> 480 Min.

In splash contact:

Glove material:	nitrile rubber
Layer thickness:	0.11 mm
Breakthrough time:	> 480 Min.

The protective gloves to be used must comply with the specifications of EC directive 89/686/EEC and the resultant standard EN374, for example KCL 741 Dermatril® L (full contact), 741 Dermatril® L (splash contact). The breakthrough times stated above were determined by KCL in laboratory tests acc. to EN374 with samples of the recommended glove types.
This recommendation applies only to the product stated in the safety data sheet and supplied by us as well as to the purpose specified by us. When dissolving in or mixing with other substances and under conditions deviating from those stated in EN374 please contact the supplier of CE-approved gloves (e.g. KCL GmbH, D-36124 Eichenzell, Internet: www.kcl.de).

Industrial hygiene:
Change contaminated clothing. Wash hands after working with substance.

9. Physical and chemical properties

Form:		solid			
Colour:		colourless			
Odour:		odourless			
pH value at 50 g/l H_2O		(20 °C)	~ 4.4		
Melting point			~ 253	°C	(decomposition)
Boiling point			not applicable (decomposition)		
Ignition temperature			not combustible		
Flash point			not flammable		
Explosion limits	lower		not applicable		
	upper		not applicable		
Density		(20 °C)	2.34	g/cm^3	
Bulk density			~ 1200	kg/m^3	
Solubility in water		(20 °C)	222	g/l	

Merck Safety Data Sheet

According to EC Directive 91/155/EEC

Catalogue No.: 104873
Product name: Potassium dihydrogen phosphate GR for analysis ISO

10. Stability and reactivity

Conditions to be avoided

no information available

Substances to be avoided

no information available

Hazardous decomposition products

in the event of fire: See chapter 5.

11. Toxicological information

Acute toxicity

LDLo (oral, rat): 4640 mg/kg.

Further toxicological information

After eye contact: Slight irritations.
After swallowing of large amounts: Possible symptoms: nausea, vomiting, gastric pain, diarrhoea, general feeling of sickness.

Further data

The product should be handled with the care usual when dealing with chemicals.

12. Ecological information

Biologic degradation:
Methods for the determination of biodegradability are not applicable to inorganic substances.

Ecotoxic effects:
Biological effects:
Fish toxicity: L.idus LC_0: ~900 mg/l /48 h.

Further ecologic data:
Depending on the concentration, phosphorus compounds may contribute to the eutrophication of water supplies.

No ecological problems are to be expected when the product is handled and used with due care and attention.

13. Disposal considerations

Product:

Chemicals must be disposed of in compliance with the respective national regulations. Under www.retrologistik.de you will find country- and substance-specific information as well as contact partners.

Packaging:

Merck product packaging must be disposed of in compliance with the country-specific regulations or must be passed to a packaging return system. Under www.retrologistik.de you will find special information on the respective national conditions as well as contact partners.

Merck Safety Data Sheet

According to EC Directive 91/155/EEC

Catalogue No.: 104873
Product name: Potassium dihydrogen phosphate GR for analysis ISO

14. Transport information

Not subject to transport regulations.

15. Regulatory information

Labelling according to EC Directives

Symbol: ---
R-phrases: ---
S-phrases: ---

16. Other information

Reason for alteration

Chapter 1:change in product name.

General update.

Regional representation:

This information is given on the authorised Safety Data Sheet for your country.

The information contained herein is based on the present state of our knowledge. It characterizes the product with regard to the appropriate safety precautions. It does not represent a guarantee of the properties of the product.

14.9 Di sodium hydrogen phosphate

VWR INTERNATIONAL

SAFETY DATA SHEET

Date of issue: 13/01/06

1. Identification of the substance/preparation and of the company/undertaking

Identification of the product

Catalogue No: 106586 ID No.: 1024900

Product name: **di-Sodium hydrogen phosphate anhydrous GR ACS (Merck 106586)**

Use of the substance/preparation: General chemical reagent

Manufacturer/supplier identification

Company: VWR International Ltd., Hunter Boulevard, Lutterworth,
Leics, LE17 4XN, England
Telephone : + 44 (0) 1455 207000 Telefax : + 44 (0) 1455 558586
E-mail: product.support@uk.vwr.com

Emergency telephone No.: + 44 (0) 1455 207000

2. Hazards identification

Not classified as dangerous according to EC Directives.

3. Composition/information on ingredients

Chemical characterization

Inorganic salt

Product name: di-Sodium hydrogen orthophosphate anhydrous
Synonyms: Sodium phosphate dibasic, phosphate of soda, exsiccated sodium phosphate

CAS number: 7558-79-4 EC-No.: 231-448-7
Molecular formula: Na_2HPO_4 = 141.96 g/mol

4. First-aid measures

- Eye contact: Irrigate thoroughly with water. If discomfort persists obtain medical attention.
- Inhalation: Remove from exposure.
- Skin contact: Wash off thoroughly with soap and water.
- Ingestion: Wash out mouth thoroughly with water. In severe cases obtain medical attention.

5. Fire-fighting measures

Special risks:

Not combustible.
May evolve toxic fumes in fire.

Suitable extinguishing media:

To suit environment.

6. Accidental release measures

Wear appropriate protective clothing.
Carefully sweep up and dispose of in accordance with local regulations.
For large spillages liquids should be contained with sand or earth and both liquids and solids transferred to salvage containers.
Any residues should be treated as for small spillages.

7. Handling and storage

Handling:

No special precautions necessary.

Storage:

Store at room temperature (15 to 25°C recommended). Keep well closed and protected from direct sunlight and moisture.

8. Exposure controls/personal protection

UK Exposure Limits:

None assigned

Personal protective equipment:

As appropriate to the situation and the quantity handled.
- Respirator: Dust respirator when dusts are generated.
- Ventilation: Extraction hood
- Gloves: Rubber or plastic
- Eye Protection: Goggles or face-shield
- Other Precautions: Plastic apron, sleeves, boots - if handling large quantities

9. Physical and chemical properties

General information:

Form:	powder, fine crystalline
Colour:	white
Odour:	odourless

Health, safety and environmental information:

Melting temperature	240°C (decomposition)
Density(g/ml)	1.53
Bulk density:	~0.88 g/ml
Solubility in water	Soluble (77 g/l, 20°C)
pH value	8.7-9.3 (50g/l, 20°C)
Flammability:	Not combustible.
Log P(o/w):	-5.8 (calculated)

10. Stability and reactivity

hygroscopic

No data

11. Toxicological information

No toxic effects are to be expected when handled properly.
- After ingestion of large amounts: nausea, vomiting, gastric pain, diarrhoea.
- After eye contact: irritant effect.

Further data

LD50 (oral, rat): 17000 mg/kg
Skin irritation test (rabbit): Slight irritation
Eye irritation test (rabbit): Slight irritation

12. Ecological information

Adverse ecological effects cannot be excluded in the event of improper handling or disposal.

Further ecological data:

Bioaccumulation potential: low (Log Pow <2).

Daphnia toxicity: EC:50: 1089mg/l/48hr

Depending on the concentration, phosphates may contribute to the eutrophication of water supplies.

13. Disposal considerations

Chemical residues are generally classified as hazardous or special waste, and as such are covered by regulations which vary according to location. Contact your local waste disposal authority for advice, or pass to a chemical disposal company. Rinse out empty containers thoroughly before returning for recycling.

14. Transport information

Not subject to transport regulations.

15. Regulatory information

Labelling according to EC directives

Not classified as dangerous according to EC Directives.

EC-No.: 231-448-7

Local Regulations

16. Other information

Revision.
Supersedes issue of 04/07/01

Changes in Section : 6,12

Date of issue:	13/01/06
Date of print:	19/12/07

14.10 Borax (Sodium tetraborate decahydrate)

Material Safety Data Sheet
Sodium tetraborate decahydrate

MSDS# 21010

Section 1 - Chemical Product and Company Identification

MSDS Name:	Sodium tetraborate decahydrate
Catalog Numbers:	AC205950000, AC205950010, AC205950050, AC419450000, AC419450010, AC419450250 AC419450250, AC419460000, AC419460010, B80, BP175-500, NC9522673, NC9821542, S246-12, S246-212, S246-250LB, S246-500, S248-10, S248-3, S248-500, S249-500, S249-500LC
Synonyms:	Borax; Sodium borate decahydrate; Disodium tetraborate decahydrate.

Company Identification:	Fisher Scientific One Reagent Lane Fair Lawn, NJ 07410
For information in the US, call:	201-796-7100
Emergency Number US:	201-796-7100
CHEMTREC Phone Number, US:	800-424-9300

Section 2 - Composition, Information on Ingredients

CAS#:	1303-96-4
Chemical Name:	Sodium tetraborate decahydrate
%:	>99
EINECS#:	unlisted

Hazard Symbols: T

Risk Phrases: 60 61

Section 3 - Hazards Identification

EMERGENCY OVERVIEW

Warning! May cause harm to the unborn child. May impair fertility. Causes eye, skin, and respiratory tract irritation. Target Organs: Respiratory system, eyes, reproductive system, skin.

Potential Health Effects

Eye:	Causes eye irritation.
Skin:	Causes skin irritation.
Ingestion:	May cause irritation of the digestive tract. Human fatalities have been reported from acute poisoning.
Inhalation:	Causes respiratory tract irritation.
Chronic:	Chronic exposure may cause reproductive disorders and teratogenic effects.

Section 4 - First Aid Measures

Eyes:	Immediately flush eyes with plenty of water for at least 15 minutes, occasionally lifting the upper and lower eyelids. Get medical aid.
Skin:	Flush skin with plenty of water for at least 15 minutes while removing contaminated clothing and shoes. Get medical aid if irritation develops or persists. Wash clothing before reuse.
Ingestion:	Get medical aid. Do NOT induce vomiting. If conscious and alert, rinse mouth and drink 2-4 cupfuls of milk or water. Wash mouth out with water.
	Remove from exposure and move to fresh air immediately. If not breathing, give artificial respiration. If

Inhalation: breathing is difficult, give oxygen. Get medical aid if cough or other symptoms appear.

Notes to Physician: Treat symptomatically and supportively.

Section 5 - Fire Fighting Measures

General Information: As in any fire, wear a self-contained breathing apparatus in pressure-demand, MSHA/NIOSH (approved or equivalent), and full protective gear. During a fire, irritating and highly toxic gases may be generated by thermal decomposition or combustion. Runoff from fire control or dilution water may cause pollution.

Extinguishing Media: Use extinguishing media most appropriate for the surrounding fire.

Autoignition Temperature: Not applicable.

Flash Point: Not applicable.

Explosion Limits: Lower: Not available

Explosion Limits: Upper: Not available

NFPA Rating: health: 2; flammability: 0; instability: 0;

Section 6 - Accidental Release Measures

General Information: Use proper personal protective equipment as indicated in Section 8.

Spills/Leaks: Vacuum or sweep up material and place into a suitable disposal container. Clean up spills immediately, observing precautions in the Protective Equipment section. Avoid generating dusty conditions. Provide ventilation.

Section 7 - Handling and Storage

Handling: Wash thoroughly after handling. Remove contaminated clothing and wash before reuse. Use with adequate ventilation. Minimize dust generation and accumulation. Avoid contact with eyes, skin, and clothing. Avoid breathing dust.

Storage: Store in a tightly closed container. Store in a cool, dry, well-ventilated area away from incompatible substances.

Section 8 - Exposure Controls, Personal Protection

Chemical Name	ACGIH	NIOSH	OSHA - Final PELs
Sodium tetraborate decahydrate	2 mg/m3 (inhalable fraction, listed under Borate compounds, inorganic); 6 mg/m3 STEL (inhalable fraction, listed under Borate compounds, inorganic)	5 mg/m3 TWA	none listed

OSHA Vacated PELs: Sodium tetraborate decahydrate: 10 mg/m3 TWA

Engineering Controls:

Facilities storing or utilizing this material should be equipped with an eyewash facility and a safety shower. Use adequate general or local exhaust ventilation to keep airborne concentrations below the permissible exposure limits.

Exposure Limits

Personal Protective Equipment

Eyes: Wear appropriate protective eyeglasses or chemical safety goggles as described by OSHA's eye and face protection regulations in 29 CFR 1910.133 or European Standard EN166.

Skin: Wear appropriate protective gloves to prevent skin exposure.

Clothing:	Wear appropriate protective clothing to prevent skin exposure.
Respirators:	A respiratory protection program that meets OSHA's 29 CFR 1910.134 and ANSI Z88.2 requirements or European Standard EN 149 must be followed whenever workplace conditions warrant respirator use.

Section 9 - Physical and Chemical Properties

Physical State:	Solid
Color:	white
Odor:	odorless
pH:	9.5 (5% aq soln)
Vapor Pressure:	Not available
Vapor Density:	Not available
Evaporation Rate:	Not available
Viscosity:	Not available
Boiling Point:	1575 deg C (2,867.00°F)
Freezing/Melting Point:	741 deg C (1,365.80°F)
Decomposition Temperature:	Not available
Solubility in water:	soluble
Specific Gravity/Density:	1.7300g/cm3
Molecular Formula:	B4Na2O7.10H2O
Molecular Weight:	381.36

Section 10 - Stability and Reactivity

Chemical Stability:	Stable at room temperature in closed containers under normal storage and handling conditions.
Conditions to Avoid:	Dust generation.
Incompatibilities with Other Materials	Strong acids, metallic salts, alkaloid salts.
Hazardous Decomposition Products	Oxides of boron.
Hazardous Polymerization	Will not occur.

Section 11 - Toxicological Information

RTECS#:	CAS# 1303-96-4: VZ2275000
LD50/LC50:	RTECS: **CAS# 1303-96-4:** Oral, mouse: LD50 = 2 gm/kg; Oral, rat: LD50 = 2660 mg/kg; .
Carcinogenicity:	Sodium tetraborate decahydrate - Not listed as a carcinogen by ACGIH, IARC, NTP, or CA Prop 65.
Other:	See actual entry in RTECS for complete information.

Section 12 - Ecological Information

Not available

Section 13 - Disposal Considerations

Dispose of in a manner consistent with federal, state, and local regulations.

Section 14 - Transport Information

US DOT
Shipping Name: Not regulated.
Hazard Class:
UN Number:
Packing Group:
Canada TDG
Shipping Name: Not regulated as a hazardous material
Hazard Class:
UN Number:
Packing Group:

Section 15 - Regulatory Information

European/International Regulations

European Labeling in Accordance with EC Directives

Hazard Symbols: T

Risk Phrases:

R 61 May cause harm to the unborn child.

R 60 May impair fertility.

Safety Phrases:

S 53 Avoid exposure - obtain special instructions before use.

S 45 In case of accident or if you feel unwell, seek medical advice immediately (show the label where possible).

WGK (Water Danger/Protection)

CAS# 1303-96-4: 1

Canada

CAS# 1303-96-4 is listed on Canada's DSL List

Canadian WHMIS Classifications: D2B

This product has been classified in accordance with the hazard criteria of the Controlled Products Regulations and the MSDS contains all of the information required by those regulations.

CAS# 1303-96-4 is listed on Canada's Ingredient Disclosure List

US Federal

TSCA

CAS# 1303-96-4 is listed on the TSCA Inventory.

Section 16 - Other Information

MSDS Creation Date: 7/06/1999

Revision #9 Date 7/20/2009

The information above is believed to be accurate and represents the best information currently available to us. However, we make no warranty of merchantibility or any other warranty, express or implied, with respect to such information, and we assume no liability resulting from its use. Users should make their own investigations to determine the suitability of the information for their particular purposes. In no event shall the company be liable for any claims, losses, or damages of any third party or for lost profits or any special, indirect, incidental, consequential, or exemplary damages howsoever arising, even if the company has been advised of the possibility of such damages.

14.11 Activated carbon

SAFETY DATA SHEET
according to Regulation (EC) No. 1907/2006

Revision Date 04.11.2011 Version 7.2

SECTION 1. Identification of the substance/mixture and of the company/undertaking

1.1 Product identifier

Catalogue No.	102183
Product name	Charcoal activated pure
REACH Registration Number	A registration number is not available for this substance as the substance or its use are exempted from registration according to Article 2 REACH Regulation (EC) No 1907/2006, the annual tonnage does not require a registration or the registration is envisaged for a later registration deadline.

1.2 Relevant identified uses of the substance or mixture and uses advised against

Identified uses	Reagent for analysis, Chemical production For additional information on uses please refer to the Merck Chemicals portal (www.merck-chemicals.com).

1.3 Details of the supplier of the safety data sheet

Company	Merck KGaA * 64271 Darmstadt * Germany * Phone:+49 6151 72-0
Responsible Department	EQ-RS * e-mail: prodsafe@merckgroup.com

1.4 Emergency telephone number Please contact the regional company representation in your country.

SECTION 2. Hazards identification

2.1 Classification of the substance or mixture

This substance is not classified as dangerous according to European Union legislation.

2.2 Label elements

Labelling (REGULATION (EC) No 1272/2008)

Not a dangerous substance according to GHS.

Labelling (67/548/EEC or 1999/45/EC)

The product does not need to be labelled in accordance with EC directives or respective national laws.

2.3 Other hazards

None known.

SECTION 3. Composition/information on ingredients

Formula	C (Hill)
CAS-No.	7440-44-0
EC-No.	231-153-3
Molar mass	12,01 g/mol

For the full text of the H-Statements mentioned in this Section, see Section 16.

The Safety Data Sheets for catalogue items are available at www.merck-chemicals.com

Page 1 of 7

SAFETY DATA SHEET
according to Regulation (EC) No. 1907/2006

Catalogue No.	102183
Product name	Charcoal activated pure

Remarks	No dangerous ingredients according to Regulation (EC) No. 1907/2006

SECTION 4. First aid measures

4.1 Description of first aid measures

After inhalation: fresh air.

After skin contact: wash off with plenty of water. Remove contaminated clothing.

After eye contact: rinse out with plenty of water.

After swallowing: make victim drink water (two glasses at most). Consult doctor if feeling unwell.

4.2 Most important symptoms and effects, both acute and delayed

We have no description of any toxic symptoms.

4.3 Indication of any immediate medical attention and special treatment needed

No information available.

SECTION 5. Firefighting measures

5.1 Extinguishing media

Suitable extinguishing media
Water, Carbon dioxide (CO_2), Foam, Dry powder

Unsuitable extinguishing media
For this substance/mixture no limitations of extinguishing agents are given.

5.2 Special hazards arising from the substance or mixture

Combustible material, Risk of dust explosion.
Development of hazardous combustion gases or vapours possible in the event of fire.

5.3 Advice for firefighters

Special protective equipment for firefighters
In the event of fire, wear self-contained breathing apparatus.

SECTION 6. Accidental release measures

6.1 Personal precautions, protective equipment and emergency procedures

Advice for non-emergency personnel: Avoid inhalation of dusts. Evacuate the danger area, observe emergency procedures, consult an expert.

Advice for emergency responders: Protective equipment see section 8.

6.2 Environmental precautions

No special precautionary measures necessary.

6.3 Methods and materials for containment and cleaning up

Observe possible material restrictions (see sections 7.2 and 10.5).
Take up dry. Dispose of properly. Clean up affected area. Avoid generation of dusts.

6.4 Reference to other sections

Indications about waste treatment see section 13.

SAFETY DATA SHEET
according to Regulation (EC) No. 1907/2006

Catalogue No.	102183
Product name	Charcoal activated pure

SECTION 7. Handling and storage

7.1 Precautions for safe handling

Observe label precautions.

7.2 Conditions for safe storage, including any incompatibilities

Dry. Tightly closed.

Storage temperature: no restrictions.

7.3 Specific end uses

Apart from the uses mentioned in section 1.2 no other specific uses are stipulated.

SECTION 8. Exposure controls/personal protection

8.1 Control parameters

8.2 Exposure controls

Engineering measures
Technical measures and appropriate working operations should be given priority over the use of personal protective equipment.

See section 7.1.

Individual protection measures
Protective clothing needs to be selected specifically for the workplace, depending on concentrations and quantities of the hazardous substances handled. The chemical resistance of the protective equipment should be enquired at the respective supplier.

Hygiene measures
Change contaminated clothing. Wash hands after working with substance.

Eye/face protection
Safety glasses

Hand protection

full contact:

Glove material:	Nitrile rubber
Glove thickness:	0,11 mm
Break through time:	> 480 min

splash contact:

Glove material:	Nitrile rubber
Glove thickness:	0,11 mm
Break through time:	> 480 min

The protective gloves to be used must comply with the specifications of EC Directive 89/686/EEC and the related standard EN374, for example KCL 741 Dermatril® L (full contact), KCL 741 Dermatril® L (splash contact).
The breakthrough times stated above were determined by KCL in laboratory tests acc. to EN374 with samples of the recommended glove types.
This recommendation applies only to the product stated in the safety data sheet<(>,<)> supplied by us and for the designated use. When dissolving in or mixing with other substances and under conditions deviating from those stated in EN374 please contact the supplier of CE-approved gloves (e.g. KCL GmbH, D-36124 Eichenzell, Internet: www.kcl.de).

SAFETY DATA SHEET
according to Regulation (EC) No. 1907/2006

Catalogue No.	102183
Product name	Charcoal activated pure

Respiratory protection
required when dusts are generated.
Recommended Filter type: Filter P 1 (acc. to DIN 3181) for solid particles of inert substances
The entrepeneur has to ensure that maintenance, cleaning and testing of respiratory protective devices are carried out according to the instructions of the producer. These measures have to be properly documented.

SECTION 9. Physical and chemical properties

9.1 Information on basic physical and chemical properties

Form	solid
Colour	black
Odour	odourless
Odour Threshold	No information available.
pH	No information available.
Melting point	3.550 °C
Boiling point	No information available.
Flash point	No information available.
Evaporation rate	No information available.
Flammability (solid, gas)	No information available.
Lower explosion limit	No information available.
Upper explosion limit	No information available.
Vapour pressure	No information available.
Relative vapour density	No information available.
Relative density	No information available.
Water solubility	at 20 °C insoluble
Partition coefficient: n-octanol/water	log Pow: 0,78 (calculated) (Lit.) Bioaccumulation is not expected.
Autoignition temperature	No information available.
Decomposition temperature	No information available.
Viscosity, dynamic	No information available.

SAFETY DATA SHEET
according to Regulation (EC) No. 1907/2006

Catalogue No.	102183
Product name	Charcoal activated pure

Explosive properties	No information available.
Oxidizing properties	No information available.

9.2 Other data

Bulk density	ca.150 - 440 kg/m³

SECTION 10. Stability and reactivity

10.1 Reactivity
Risk of dust explosion.

10.2 Chemical stability
The product is chemically stable under standard ambient conditions (room temperature) .

10.3 Possibility of hazardous reactions
Risk of explosion with:
Oxidizing agents, oils, halogens, Peroxides

10.4 Conditions to avoid
Strong heating.

10.5 Incompatible materials
no information available

10.6 Hazardous decomposition products
no information available

SECTION 11. Toxicological information

11.1 Information on toxicological effects
Specific target organ toxicity - single exposure
The substance or mixture is not classified as specific target organ toxicant, single exposure.
Specific target organ toxicity - repeated exposure
The substance or mixture is not classified as specific target organ toxicant, repeated exposure.
Aspiration hazard
Based on available data the classification criteria are not met.

11.2 Further information
Quantitative data on the toxicity of this product are not available.
Further toxicological data:
Our own experience has provided no indication of any hazardous potential.
Other information
Inhalation of the dusts should be avoided as even inert dusts may impair respiratory organ functions.
Further data:
Handle in accordance with good industrial hygiene and safety practice.

SECTION 12. Ecological information

12.1 Toxicity
No information available.

12.2 Persistence and degradability

SAFETY DATA SHEET
according to Regulation (EC) No. 1907/2006

Catalogue No.	102183
Product name	Charcoal activated pure

No information available.

12.3 Bioaccumulative potential

Partition coefficient: n-octanol/water
log Pow: 0,78
(calculated)
(Lit.) Bioaccumulation is not expected.

12.4 Mobility in soil

No information available.

12.5 Results of PBT and vPvB assessment

PBT/vPvB assessment not available as chemical safety assessment not required/not conducted.

12.6 Other adverse effects

Additional ecological information
No ecological problems are to be expected when the product is handled and used with due care and attention.

SECTION 13. Disposal considerations

Waste treatment methods
See www.retrologistik.com for processes regarding the return of chemicals and containers, or contact us there if you have further questions.

SECTION 14. Transport information

ADR/RID
Not dangerous goods
Environmentally hazardous no

IATA Not permitted for transport
UN 1362 CARBON, ACTIVATED
Environmentally hazardous no

IMDG
Not dangerous goods

The transport regulations ADR/RID, IATA - DGR, IMDG -Code are cited according to international regulations and in the form applicable in Germany. Possible national deviations in other countries are not considered.

SECTION 15. Regulatory information

15.1 Safety, health and environmental regulations/legislation specific for the substance or mixture

EU regulations

Major Accident Hazard	96/82/EC
Legislation	Directive 96/82/EC does not apply

National legislation

Storage class	10 - 13

15.2 Chemical Safety Assessment

For this product a chemical safety assessment was not carried out.

SAFETY DATA SHEET
according to Regulation (EC) No. 1907/2006

Catalogue No.	102183
Product name	Charcoal activated pure

SECTION 16. Other information

Full text of H-Statements referred to under sections 2 and 3.

Training advice
Provide adequate information, instruction and training for operators.

Key or legend to abbreviations and acronyms used in the safety data sheet
Used abbreviations and acronyms can be looked up at www.wikipedia.org.

Regional representation
This information is given on the authorised Safety Data Sheet for your country.

The information contained herein is based on the present state of our knowledge. It characterises the product with regard to the appropriate safety precautions. It does not represent a guarantee of any properties of the product.

Index